deta *INTERNATIONAL*

#40 DISK TYPE TOOL CHANGER SYSTEM

USER MANUAL

This manual is applicable to model:

MR4F

BT40/CAT40/DIN40/HSK50A/HSK63A

Contents

Page

1、Tool Changer System Mechanical Specification & Drawing 02

2、Bracket Design 04

3、Tool Changing Motion Flowchart 05

4、Power Supply Specification for Electrical Control 06

5、Electrical Control 07

6、Electrical Control Protection Programming 08

7、Installation Procedure 09

8、Original Setting 11

9、Trouble Shooting 12

10、Maintenance 17

1、Tool Changer System Mechanical Specification & Drawings :

1-1. Specification:

Item / Model	MR4F
Tool Capacity	24T
Maximum Tool Diameter	90mm
Max. Tool Length	300mm
Max. Tool Weight	8Kgf
Total Tool Weight	120 Kgf
Max. Unbalance on disk	870 Kgf-cm
Max. Tool Inertia	210 Kgf-cm
CAMBOX Speed (CAMBOX Only)	1.5 sec. (60Hz)
Magazine Speed	0.6 sec. / tool (60Hz)
Tool Selection	Two Way Random Selection

1-2. Maximum Tool Rotational Inertia Diagram:
Drawing:

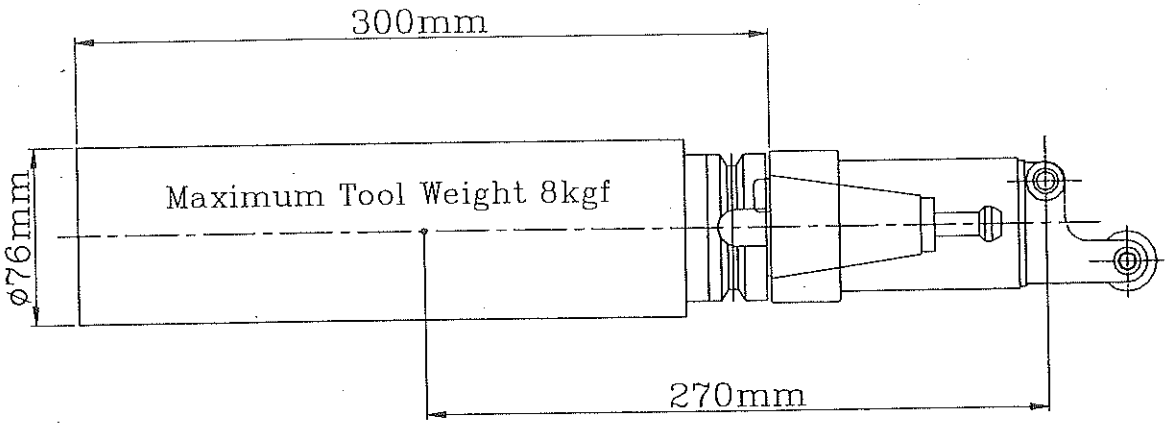

1-3. Drawings:

Assembly drawing and part list for disk type tool magazine, CAM BOX and tool changing arm as per attached drawings and list.

#40X24T DISK TYPE (MR4F)-1

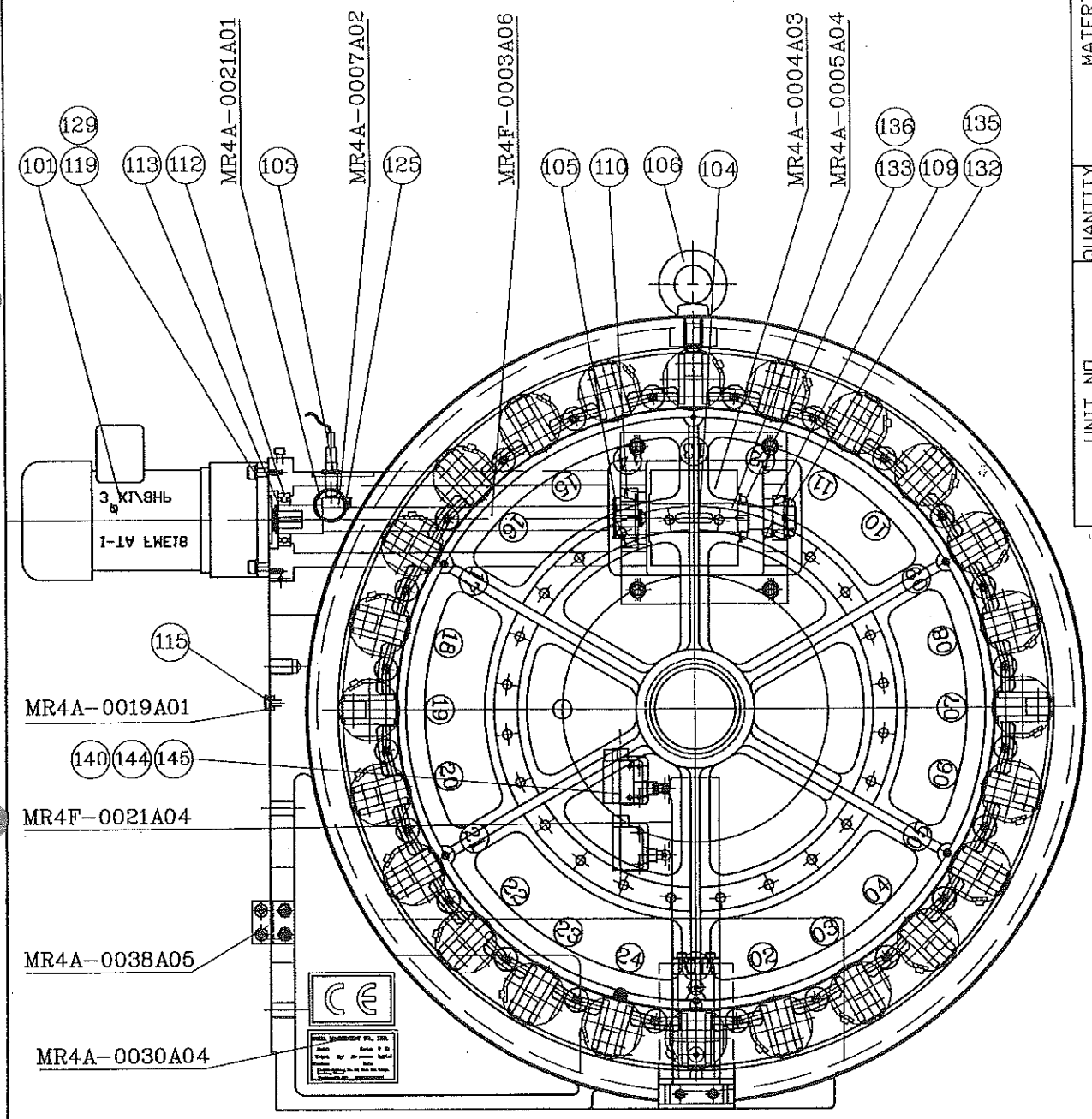

UNIT NO.	QUANTITY	MATERIAL	NO: D4-02-03 2001/12
MR4F-0000A01			TOLERANCE
PART NO.	SCALE	TITLE	>0 ±0.1
		#40X24TDISK TYPE	>6 ±0.2
CHECK APPROVE			>30 ±0.3
DRAWING DESIGN			>120 ±0.5
NAME	Betty JAN.18.2001		>315 ±0.8
			>1000 ±1.2

deta International
TEL:886-4-25617722 FAX:886-4-25617177

#40X24T DISK TYPE (MR4F)-2

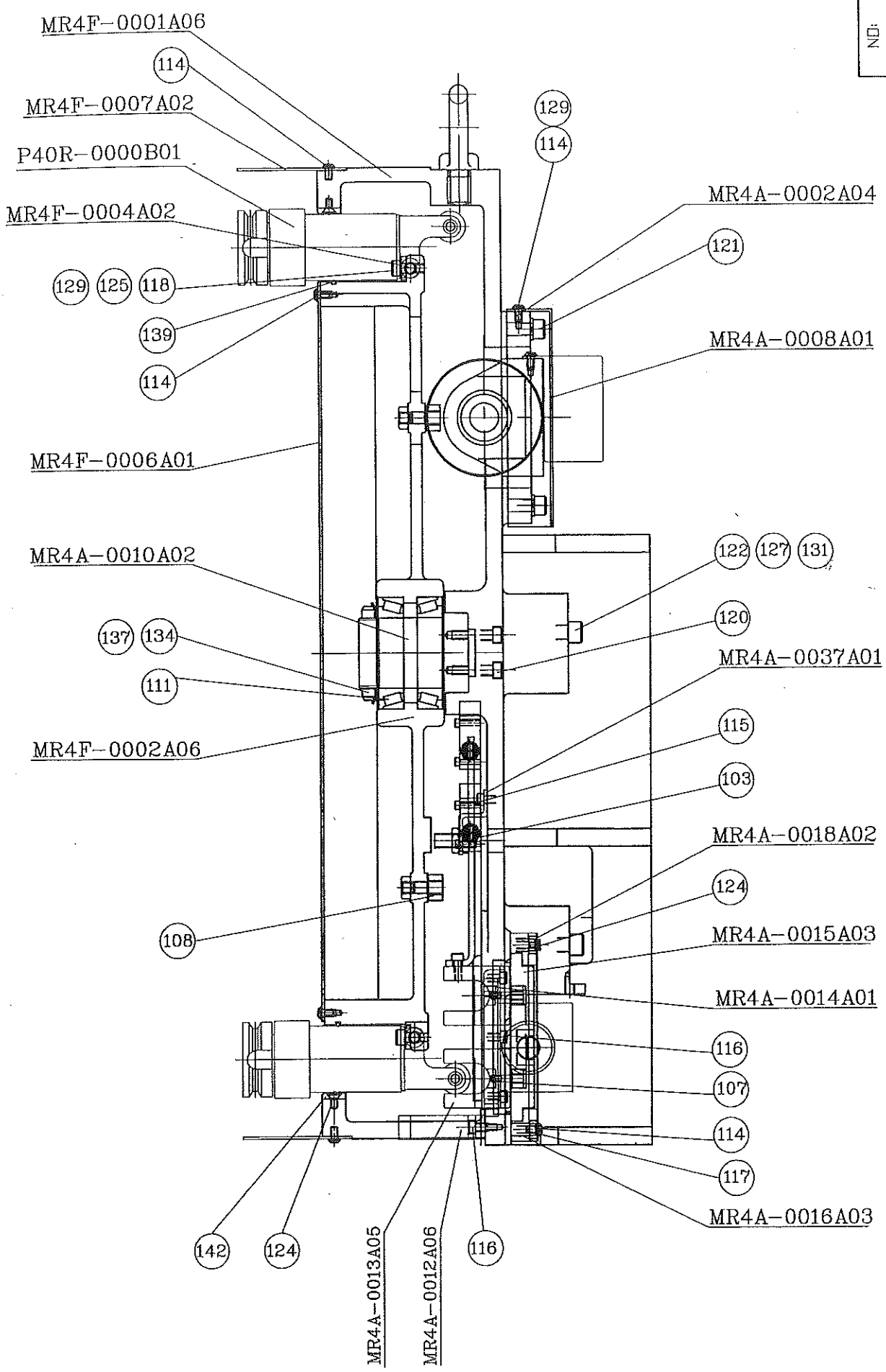

NO:		TOLERANCE	>0 ±0.1 >6 ±0.2 >30 ±0.3 >120 ±0.5 >315 ±0.8 >1000 ±1.2
	D4-02-03 2001/12		
MATERIAL		TITLE	#40X24T DISK TYPE
QUANTITY		SCALE	
UNIT NO.	MR4F-0000A01	PART NO.	
CHECK	APPROVE		
DRAWING	DESIGN		
NAME	蔣淑惠SEP.12,2002		

deta International
TEL:886-4-25617722 FAX:886-4-25617177

#40X24T DISK TYPE (MR4F)-3

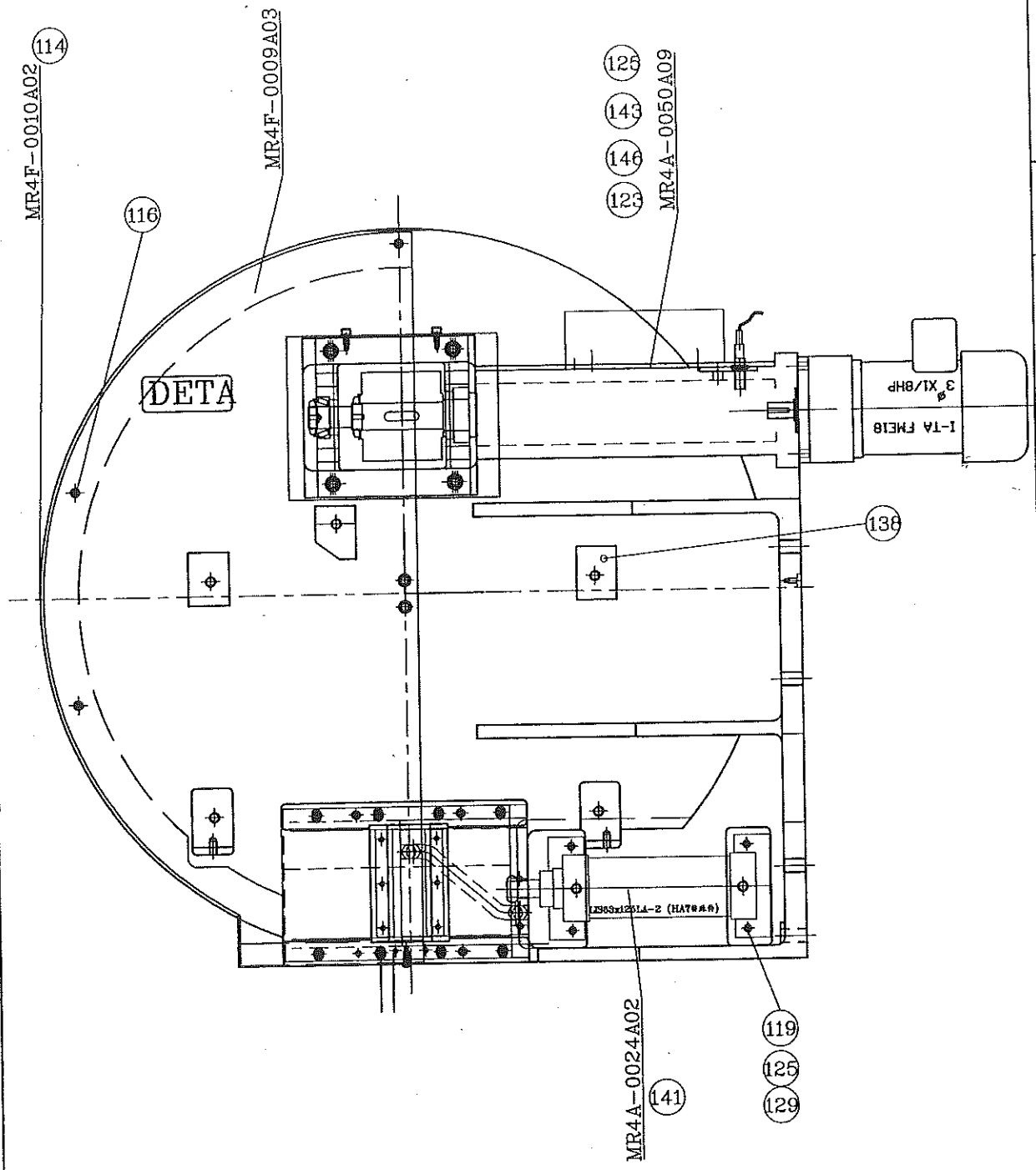

NO.		TOLERANCE	
	04-02-03 2001/12	>0 ±0.1	
		>6 ±0.2	
		>30 ±0.3	
		>120 ±0.5	
		>315 ±0.8	
		>1000 ±1.2	
MATERIAL		TITLE	#40X24T DISK TYPE
QUANTITY		SCALE	
UNIT NO.	MR4F-0000A01	PART NO.	
		CHECK APPROVE	
		DRAWING DESIGN	
		NAME	邱淑惠 AUG,03,1999

deta International
TEL:886-4-25617722 FAX:886-4-25617177

deta *International* PROCESS PART LIST

D4-02-08
2001/12

PAGE	MODEL	UNIT NO.	DESIGN	CHECK	APPROVE
1/1	**#40X24 TOOL DISK TYPE ATC SYSTEM**	MR4F-0000A04	AMAY 2005.5.12		

NO.	PARTS NAME	PARTES NO.	Q'TY	SPECIFICATION	NOTE
1	TOOL CUP	P40R-0000B01	24		OPTIONAL
2	MAIN BODY	MR4F-0001A06	1	FC30	
3	TOOL DISK	MR4F-0002A06	1	FC30	
4	SHAFT	MR4F-0003A06	1	S45C	
5	SHAFT	MR4F-0004A02	24	SK4	
6	FRONT COVER	MR4F-0006A01	1	ACRYLIC	OPTIONAL
7	COVER	MR4F-0007A02	1	ACRYLIC	OPTIONAL
8	ATC COVER	MR4F-0009A03	1	FRP	OPTIONAL
9	ATC COVER WINDER	MR4F-0010A02	1	ACRYLIC	OPTIONAL
10	HOUSEING	MR4A-0002A04	1	FC30	
11	BARREL CAM	MR4A-0004A03	1	SACM1	
12	BARREL CAM SHAFT	MR4A-0005A04	1	S45C	
13	DOG(I)	MR4A-0007A02	1	SS41	
14	BARREL CAM COVER	MR4A-0008A01	1	SS41	
15	SHAFT	MR4A-0010A02	1	S45C	
16	TOOL POSITIONING BRACKET	MR4A-0012A06	1	UP	
17	TOOL TILT BLOCK	MR4A-0013A05	1	SACM1	
18	TOOL TILT BLOCK RAIL	MR4A-0014A01	2	S45C	
19	TRANSITION CAM	MR4A-0015A03	1	SCM4	
20	TRANSITION CAM	MR4A-0016A03	2	S45C	
21	TRANSITION CAM COVER	MR4A-0018A02	1	SS41	
22	POSITIONING BRACKET	MR4A-0019A01	2	S45C	
23	WINDER	MR4A-0021A01	1	ACRYLIC	
24	PNEUMATIC CYLINDER	MR4A-0024A02	1	ϕ63X125L LA	
25	NAME PLATE	MR4A-0030A04	1	AL	
26	FIX BLOCK	MR4A-0037A01	1	SS41	OPTIONAL
27	ADJUSTING BLOCK	MR4A-0038A05	1	SS41	OPTIONAL
28	CE BLOCK	MR4A-0050A09	1	SS41	
29	LIMIT SWITCH DOG	MR4F-0021A04	1	SS41	
30	ABOVE				

deta *International* STANDARD PART LIST

D4-02-08
2001/12

PAGE	MODEL	UNIT NO.	DESIGN	CHECK	APPROVE
1/2	**#40X24 TOOLS DISK TYPE ATC SYSTEM**	MR4F-0000A04	AMAY 2005.5.12		

NO.	PARTS NAME	PARTES NO.	Q'TY	SPECIFICATION	NOTE
101	GEAR REDUCER MOTOR	MT1100011820	1	1/4HPX4P(1/20)	
103	PROXIMITY SWITCH	SR1000000012	1	RG4012-0AG01	
104	KEY	KY0000100840	1	10X8X40L	
105	KEY	KY0000050525	1	5X5X25L	
106	BOLT	BT0000000020	1	M20XP2.5X30L	
107	ROLLER FOLLOWER	BE0000000CF6	1	CF6	
108	ROLLER FOLLOWER	BE000000CF10	24	CF10	
109	TAPER ROLLER	BE0000032005	1	32005	
110	TAPER ROLLER	BE0000032007	1	32007	
111	TAPER ROLLER	BE0000032012	2	32012	
112	BALL BEARING	BE00006006ZZ	1	6006	
113	RETAIN RING	BR0000001030	1	Sφ30	
114	SKT.HD.CAP SCR.	BH0000006010	28	M6XP1X10L	
115	SKT.HD.CAP SCR.	CP0000006012	4	M6XP1.0X12L	
116	SKT.HD.CAP SCR.	CP0000006016	11	M6XP1.0X16L	
117	SKT.HD.CAP SCR.	CP0000006030	8	M6XP1.0X30L	
118	SKT.HD.CAP SCR.	CP0000008020	24	M8XP1.25X20L	
119	SKT.HD.CAP SCR.	CP0000008025	8	M8XP1.25X25L	
120	SKT.HD.CAP SCR.	CP0000008030	2	M8XP1.25X30L	
121	SKT.HD.CAP SCR.	CP0000010025	4	M10XP1.5X25L	
122	SKT.HD.CAP SCR.	CP0000012045	4	M12XP1.75X45L	
123	FLAT HD. SCR.	FM0000006010	2	M6XP1.0X10L	
124	FLAT HD. SCR.	FM0000006012	15	M6XP1.0X12L	
125	WASHER	WA0000000008	31	φ8	
126	WASHER	WA0000000010	4	φ10	
127	WASHER	WA0000000012	4	φ12	
129	SPRING WASHER	SW0000000008	36	φ8	
131	SPRING WASHER	SW0000000012	4	φ12	
132	BEARING NUT	RN0000000025	1	M25XP1.5	
133	BEARING NUT	RN0000000030	1	M30XP1.5	

deta *International* STANDARD PART LIST

D4-02-08
2001/12

PAGE	MODEL	UNIT NO.	DESIGN	CHECK	APPROVE
2/2	**#40X24 TOOLS DISK TYPE ATC SYSTEM**	MR4F-0000A04	AMAY 2005.5.12		

NO.	PARTS NAME	PARTES NO.	Q'TY	SPECIFICATION	NOTE
134	BEARING NUT	RN0000000060	1	M60XP2.0	
135	BEARING WASHER	RW0000000025	1	dφ25	
136	BEARING WASHER	RW0000000030	1	dφ30	
137	BEARING WASHER	RW0000000060	1	dφ60	
138	TAPER PIN	PN0000208040	2	#8X40L	
139	O-RING	OR0000351670	1	φ3.5	
140	LIMIT SWITCH	SQ000000LS1A	2	YAMAATAKE(LS1-A)	
141	VALVE	FV0000001003	2	JSC10-03	
142	POT RAIL	UP0022052320	1	P 22X5X2320L	
143	CE ELECTRONIC BOX	EB0000PS1809	1	PS-1809-6	
144	SKT.HD.CAP SCR.	CP0000004030	4	M4XP0.7X30L	
145	SPRING WASHER	SW0000000004	4	φ4	
146	SKT.HD.CAP SCR.	CP0000004010	4	M4XP0.7X10L	
147	ABOVE				
148					
149					
150					
151					
152					
153					
154					
155					
156					
157					
158					
159					
160					
161					
162					
163					

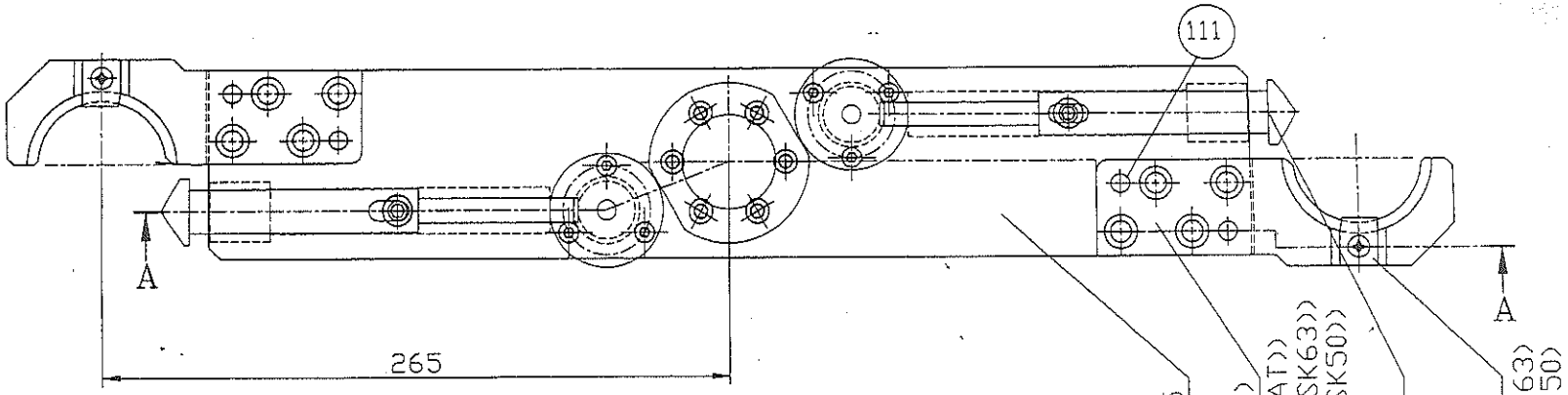

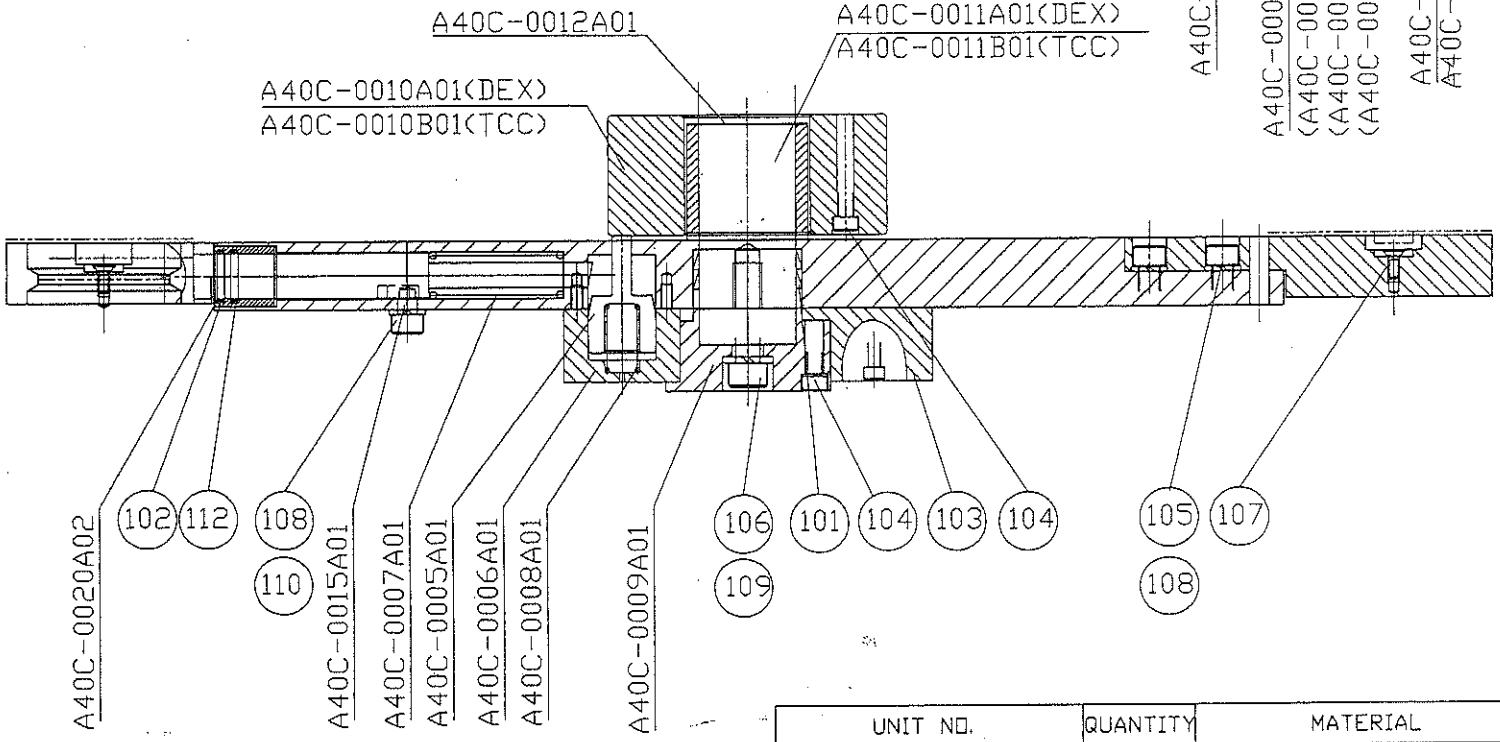

UNIT NO.	QUANTITY	MATERIAL	04-02-03 2001/12	TOLERANCE
A40C-0000B02				>0 ±0.1 >6 ±0.2 >30 ±0.3 >120 ±0.5 >315 ±0.8 >1000 ±1.2
PART NO.	SCALE	TITLE		
		#40 ARM(R=265)		

deta *International*
TEL:886-4-25617722 FAX:886-4-25617177

	DRAWING DESIGN	CHECK APPROVE
NAME	Mary JUN,06,2002	黃耀德

deta *International*

D4-02-08
2001/12

STAND PART LIST

PAGE	MODEL	UNIT NO.	DESIGN	CHECK	APPROVE
1/1	#40 ARM (R=265)	A40C-0000B02	Mary JUN, 04, 2002	黃耀德	

NO.	PARTS NAME	PART NO.	Q'TY	MATERIAL	NOTE
101	TAPER SNAP RING	CX0000d40D45	2	dφ40, Dφ45	
102	SEAL	OT00000SER18	2	SER-18(φ22Xφ18X3.9H)	
103	SKT. HD. CAP SCR.		6	M5X0.8PX35L	
104	SKT. HD. CAP SCR.		8	M6X1.0PX20L	
105	SKT. HD. CAP SCR.		4	M6XP1.0X55L	
106	SKT. HD. CAP SCR.		8	M8XP1.25X20L	
107	SKT. HD. CAP SCR.		1	M12XP1.75X35L	
108	BUT. HD. SCR.		2	M5X0.8PX8L	
109	SPRING WASHER		10	M8	
110	SPRING WASHER		1	M12	
111	WASHER		2	φ8	
112	O-RING	OR0000000P18	2	P18	
113	ABOVE.				
114					
115					
116					
117					
118					
119					
120					
121					
122					
123					
124					
125					
126					
127					
128					
129					
130					

deta *International*

D4-02-07
2001/12

PROCESS PART LIST

PAGE	MODEL	UNIT NO.	DESIGN	CHECK	APPROVE
1/1	#40ARM (R=265)	A40C-0000B02	Mary JUN, 04, 2002	黃耀德	

NO.	PARTS NAME	PART NO.	Q'TY	MATERIAL	NOTE
1	MAIN BODY	A40C-0001C04	1	S50C	
2	GRIPPER	A40C-0002A02	2	S50C	OPTION
3	GRIPPER	A40C-0002B02	2	S50C	OPTION
4	FINGER	A40C-0003A02	2	S50C	
5	KEY	A40C-0004A01	2	S45C	
6	SAFETY PIN	A40C-0005A01	2	S45C	
7	SPRING COVER	A40C-0006A01	2	S45C	
8	FINGER SPRING	A40C-0007A01	2	φ17.1x61.4L	
9	PIN SPRING	A40C-0008A01	2	φ14.2x52L	
10	SNAP RING PRESS PLATE	A40C-0009A01	1	SCM4	
11	PRESS BRACKET	A40C-0010A01	1	S45C	
12	ARM SPACER	A40C-0011A01	1	SS41	
13	ARM SPACER WASHER	A40C-0012A01	1	SS41(0.8t)	
14	SKT, HD, CAP SCR	A40C-0013A02	2	M8XP1.25X11L	
15	COPPER COVER	A40C-0020A02	2	Cu	
16	ABOVE				
17					
18					
19					
20					
21					
22					
23					
24					
25					
26					
27					
28					
29					
30					

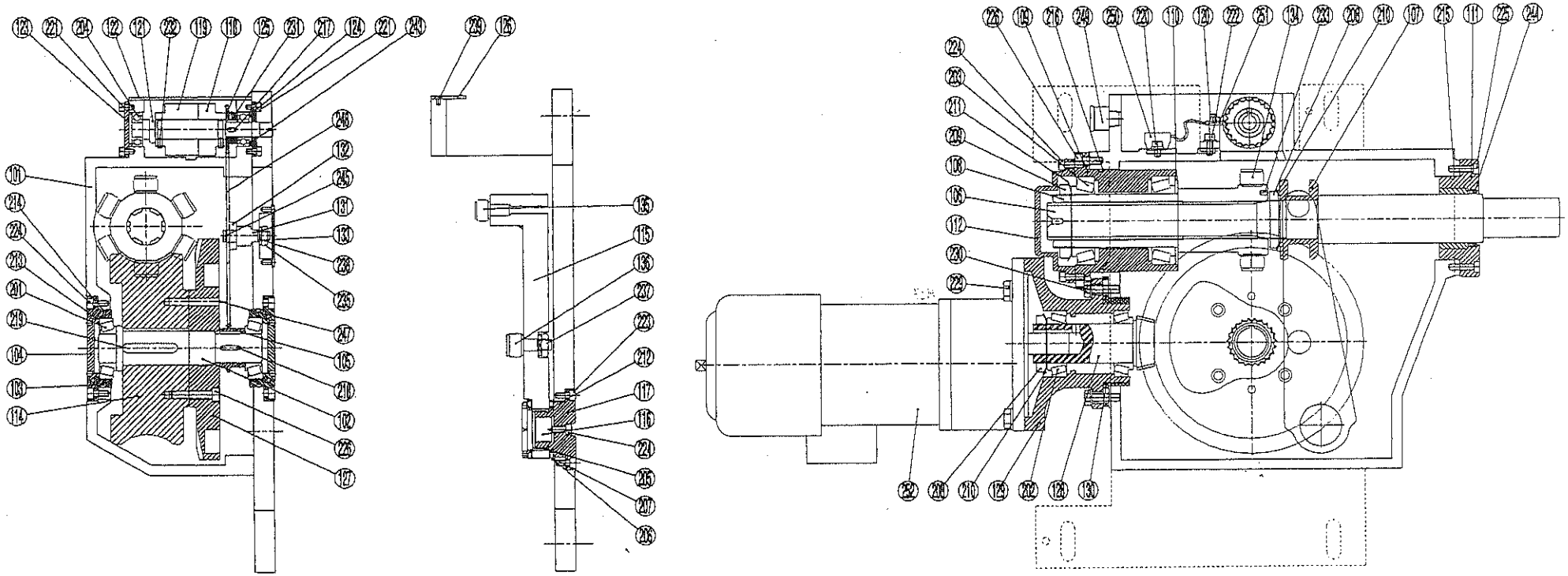

UNIT NO.	Quantity	MATERIAL	WEIGHT(kg)	TOLERANCE
				>0 ±0.1 >6 ±0.2 >30 ±0.3 >120 ±0.5 >315 ±0.8 >1000 ±1.2

deta international
TEL: 886-4-25617722 FAX: 886-4-25617177

	DRAWING DESIGN	CHECK APPROVE	PART NO.	SCALE	TITLE
NAME			DEX2-0000A01		

deta *INTERNATIONAL* STANDARD PART LIST

D4-02-07
2001/12

PAGE	MODEL	UNIT NO.	DESIGN	CHECK	APPROVE
1/4	CAM BOX	DEX2-0000A01	DEX		

NO.	PARTS NAME	PARTES NO.	Q'TY	SPECIFICATION	NOTE
101	Case	A4020SC00001	1		
102	Cam shaft	A402A0100001	1		
103	Tuneup cap	A402A0200001	2		
104	Tuneup screw cap	A402A0300001	2		
105	Cam shaft sprocket	A402A0400001	1		
106	Spline(output) shaft	A402B0100001	1		
107	Transmitt wheel	A402B0200001	1		
108	Bearings tube	A402B0300001	1		
109	Bearings tube fixture	A402B0400001	1		
110	Bearings tube gasket	A402B0500001	1		
111	Front fix cap(20mm)	A402B0600001	1		
	Front fix cap(10mm)	A402B0600002			
112	Back fix cap	A402B0900001	1		
113	Front fix gasket(10mm)	A402B1000001	1		
114	Cam(65°)	A402C0100065	1		
115	Rocker	A402D0100001	1		
116	Rocker shaft	A402D0200001	1		
117	Rocker stand packing cap	A402D0300001	1		
118	Brake signal wheel	A402E01000A1	1		
119	Cam signal wheel	A402E01000B1	1		
120	Signal fixture	A402E0200001	1		
121	Signal shaft	A402E0300001	1		
122	Dustproof cap	A402E0400001	1		
123	Signal cap	A402E0500001	1		
124	Signal cap(have hole)	A402E0600001	1		
125	Signal sprocket	A402E0700001	1		
126	Signal try up parcel	A402E0800001	1		
127	Big umbrella gear	A402F0100001	1		
128	Small umbrella gear	A402F0200001	1		
129	Motor fixture	A402F0300001	1		

deta *INTERNATIONAL* STANDARD PART LIST

D4-02-07
2001/12

PAGE	MODEL	UNIT NO.	DESIGN	CHECK	APPROVE
2/4	CAM BOX	DEX2-0000A01	DEX		

NO.	PARTS NAME	PARTES NO.	Q'TY	SPECIFICATION	NOTE
130	Adjustment sheet	A402F0900001	1		
131	Idler shaft	A402J0100001	1		
132	Idler sprocket	A402J0200001	1		
133	Idler outside cap	A402J0300001	1		
134	Bearings φ20	RB00020000A1	6		
135	Bearings φ22	RB00022000A1	1		
136	Bearings φ24	RB00024000A2	1		
201	Tapered roller bearings 30206	HR30206	2		
202	Tapered roller bearings 32008	HR32008	2		
203	Tapered roller bearings 32011	HR32011	2		
204	Deep groove ball bearings 6202	BR6202	2		
205	Needle bearings HK3516	HK3516	1		
206	Thrust bearings AXK1108	AXK1108	2		
207	Thrust bearings parcel AS1108	AS1108	4		
208	Sun's unt AN08	AN08	2		
209	Sun's unt AN11	AN11	1		
210	Sun's gasket AW08	AW08	2		
211	Sun's gasket AW11	AW11	1		
212	O ring G50	G50	1		
213	O ring φ55*2	O-55*2	2		
214	O ring G75	G75	2		
215	O ring G80	G80	1		
216	O ring G100	G100	1		
217	Double circle keys 4*4*10	DFK4*4*10	1		
218	Double circle keys 5*5*20	DFK5*5*20	1		
219	Double circle keys 10*8*55	DFK10*8*55	1		
220	Inside hexagonal screw M4*8L	HI-M4*8L	8		
221	Inside hexagonal screw M4*10L	HI-M4*10L	8		
222	Inside hexagonal screw M5*16L	HI-M5*16L	2		
223	Inside hexagonal screw	HI-M6*14L	4		

deta *INTERNATIONAL* STANDARD PART LIST

D4-02-07
2001/12

PAGE	MODEL	UNIT NO.	DESIGN	CHECK	APPROVE
3/4	CAM BOX	DEX2-0000A01	DEX		

NO.	PARTS NAME	PARTES NO.	Q' TY	SPECIFICATION	NOTE
224	Inside hexagonal screw M6*16L	HI-M6*16L	17		
225	Inside hexagonal screw M6*25L	HI-M6*25L	6		
226	Inside hexagonal screw M8*20L	HI-M8*20L	7		
227	Inside hexagonal screw M8*25L	HI-M8*25L	13		
228	Inside hexagonal screw M8*35L	HI-M8*35L	2		
229	Inside hexagonal screw M10*20L	HI-M10*20L	4		
230	Inside hexagonal screw M10*30L	HI-M10*30L	4		
231	settled screw M5*5L	HS-M5*5L	1		
232	settled screw M5*10L	HS-M5*10L	2		
233	settled screw M6*8L	HS-M6*8L	8		
234	Bury screw M4*8L	CO-M4*8L	1		
235	Bury screw M5*8L	CO-M5*8L	4		
236	Hexagonal screw capM10	SC-M10	1		
237	Hexagonal screw capM12	SC-M12	1		
238	Gasket M10	WS-M10	1		
239	Plastics screw M3*6L	PF-308	4		
240	Oil plugger PT 1/8"	PT1/8"	1		
241	Oil plugger PT 1/2"	PT1/2"	4		
242	Oil eyeglass φ28	OI-28	1		
243	TC type oil seals 15*24*2	TC15*24*5	1		
244	USH type oil seals 50*60*6	USH50*60*6	1		
245	Shaft ouch C12	C12S	1		
246	Taper pin φ8*32L(1:50)	PIN-T-8*32L	3		
247	Parallelism pin φ8*30L	PIN-P-8*30L	2		
248	Chain	CH-95	1		
249	Wire studs(KSS)	AG-16	1		
250	Terminal frisket	TM-10A600V	1		
251	Proximity switch		3	ϕ=4mm PNP NO 3 Wire type	Deta seandard
	Proximity switch		3	M8XP1 PNP NO 3 Wire type	Option
	Proximity switch		3	ϕ=4mm NPN NO 4 Wire type	Option

deta *INTERNATIONAL* STANDARD PART LIST

D4-02-07
2001/12

PAGE	MODEL	UNIT NO.	DESIGN	CHECK	APPROVE
4/4	CAM BOX	DEX2-0000A01	DEX		

NO.	PARTS NAME	PARTES NO.	Q'TY	SPECIFICATION	NOTE
	Proximity switch		3	ϕ=4mm NPN NO 4 Wire type	Option
252	Motor 1/2HP AC220(1:10)		1		Option
253					
254					
255					
256					
257					
258					
259					
260					
261					
262					
263					
264					
265					
266					
267					
268					
269					
270					
271					
272					
273					
274					
275					
276					
277					
278					
279					
280					

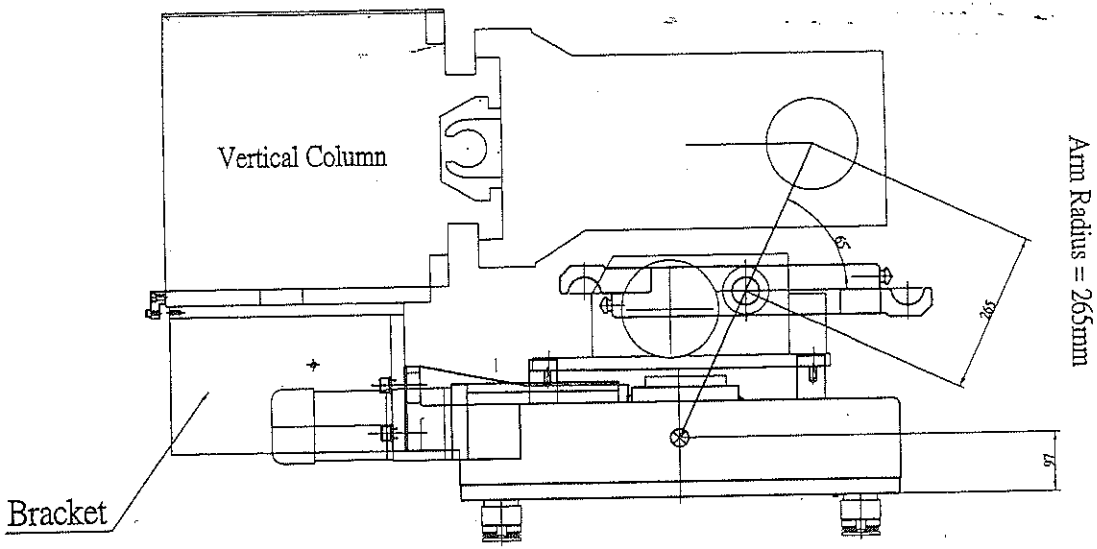

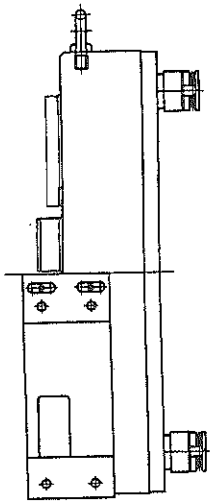

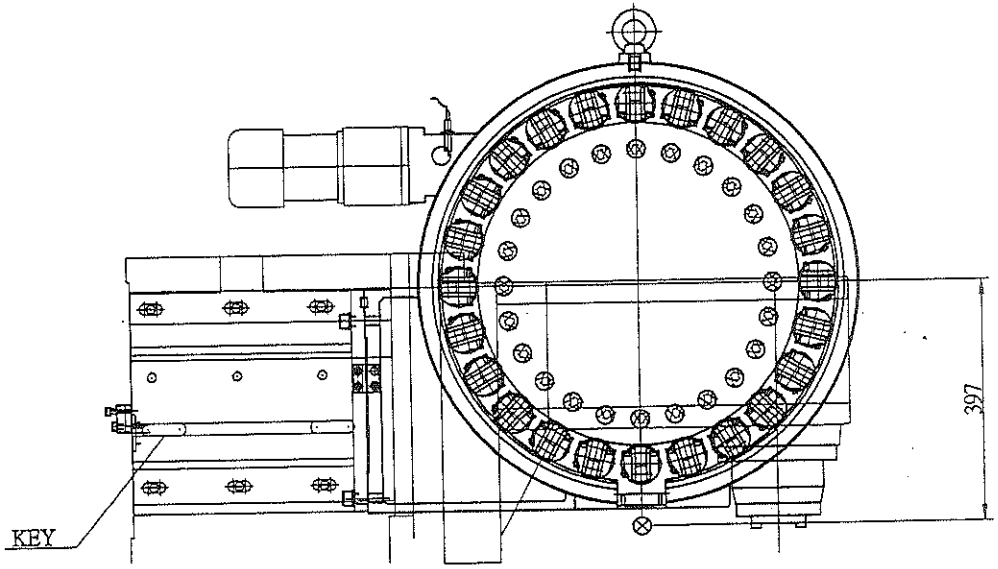

				UNIT NO.	QUANTITY	MATERIAL	NO: D4-02-03 2001/12
				PART NO.	SCALE	TITLE	
				DMR4A0015A01		Example of design of bracket for #40x24T DISK TYPE	
		DRAWING DESIGN	CHECK APPROVE				
	NAME	Betty SEP,28,2000					

TOLERANCE

>0	±0.1
>6	±0.2
>30	±0.3
>120	±0.5
>315	±0.8
>1000	±1.2

deta *International*

TEL:886-4-25617722 FAX:886-4-25617177

Example of Bracket

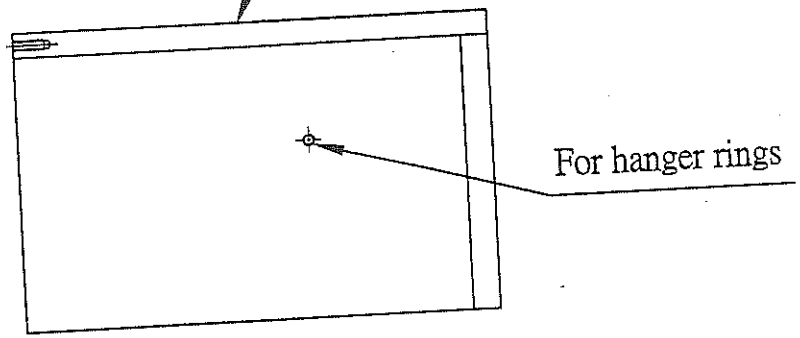

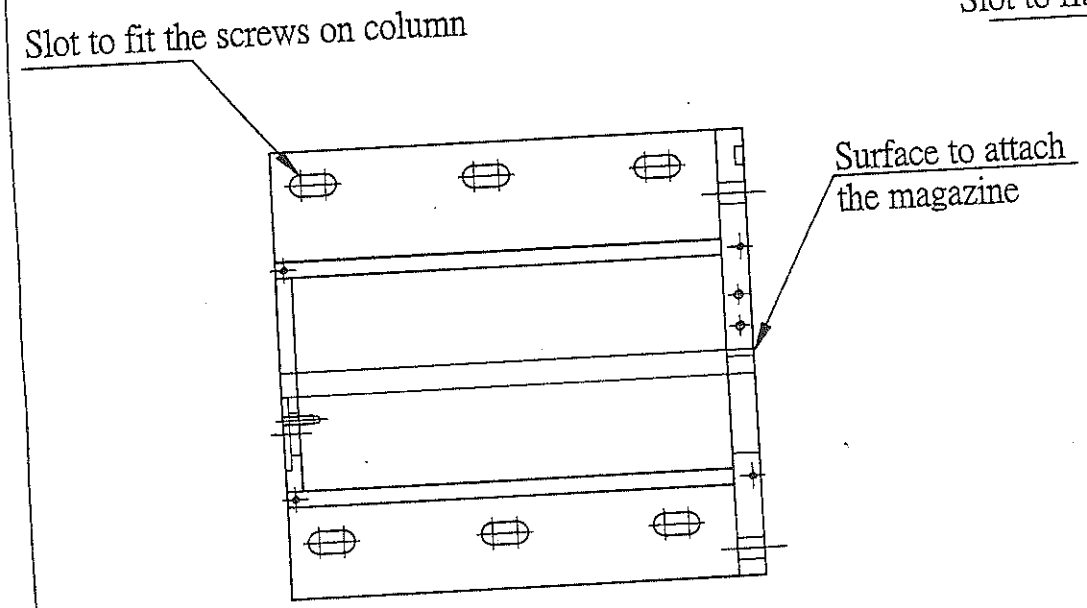

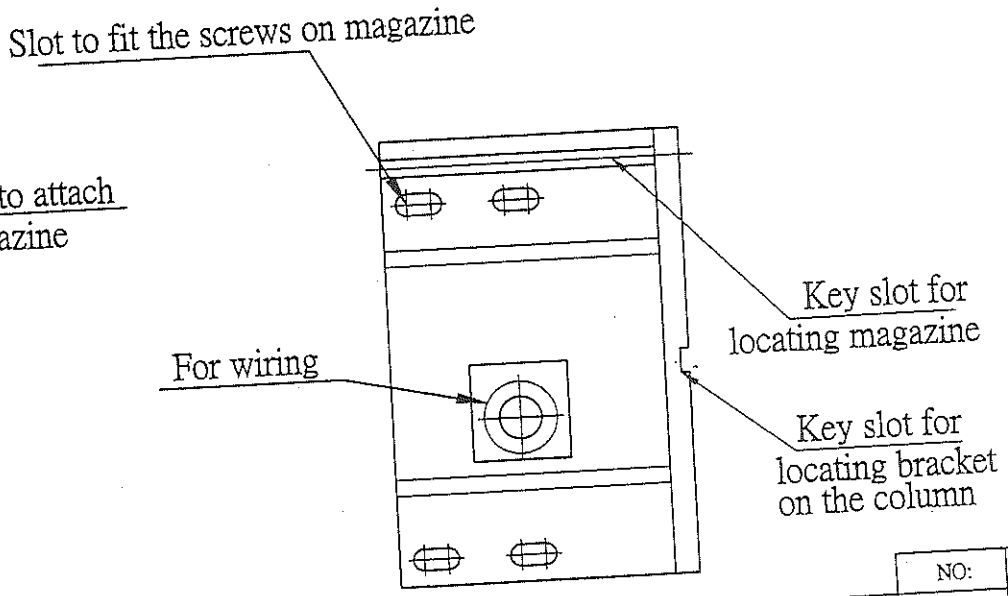

			UNIT NO.	QUANTITY	MATERIAL	NO: D4-02-03 2001/12	TOLERANCE
							>0 ±0.1 >6 ±0.2 >30 ±0.3 >120 ±0.5 >315 ±0.8 >1000 ±1.2
			PART NO.	SCALE	TITLE		
	DRAWING DESIGN	CHECK APPROVE	DMR4A0016A01		Example of Bracket		
NAME	Betty SEP,28,2000						

deta *International*
TEL:886-4-25617722 FAX:886-4-25617177

3、Tool Changing Motion Flowchart:

The following drawings describe the motion sequences of the CAMBOX system:

#40 Disk Type Tool Magazine Tool Changing Motion Flowchar –1 ..... DMR4A0001A01

#40 Disk Type Tool Magazine Tool Changing Motion Flowchart –2 .....DMR4A0002A01

#40 Disk Type Tool Magazine Tool Changing Motion Flowchart –3.....DMR4A0003A01

#40 Disk Type Tool Magazine Tool Changing Motion Flowchart –4.....DMR4A0004A01

#40 Disk Type Tool Magazine Tool Changing Motion Flowchart –5 .....DMR4A0005A01

#40 Disk Type Tool Magazine Tool Changing Motion Flowchart –6.....DMR4A0006A01

#40 Disk Type Tool Magazine Tool Changing Motion Flowchart –7 .....DMR4A0007A01

#40 Disk Type Tool Magazine Tool Changing Motion Flowchart –8.....DMR4A0008A01

deta INTERNATIONAL #40 DISK TYPE TOOL MAGAZINE TOOL CHANGING MOTOIN FLOWCHART-1

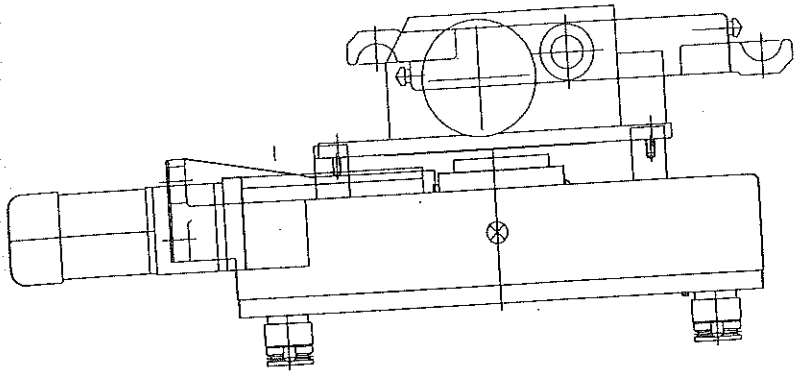

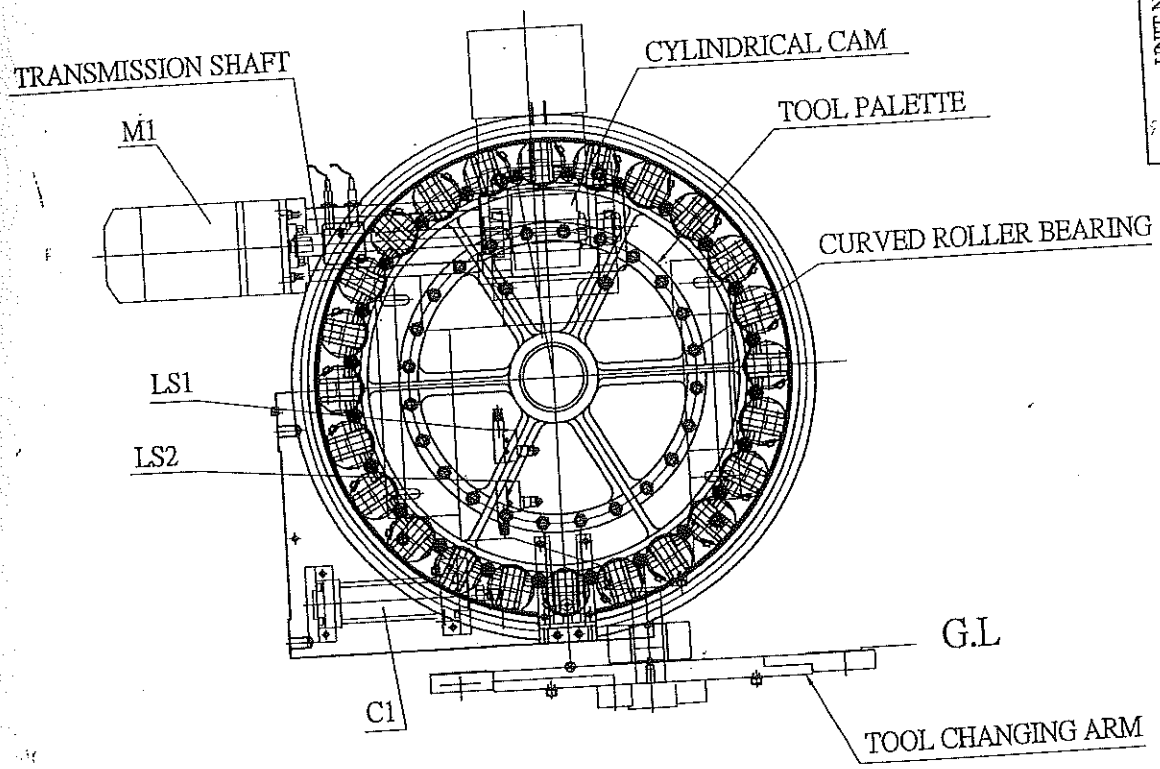

1. When the tool pot returns the tool, the limits switch LS2 will be ON. This confirms immediately that the tool pot is at the horizontal position. Start the tool magazine motor M1 to allow the transmission shaft to put the cylindrical cam into motion, which indirectly drives the curved roller bearing, and enables the tool palette to rotate intermittently. As the cylindrical cam rotates one cycle, it causes the tool palette to rotate one division (i.e. the distance between two tool pots) and enables the tool palette to position itself accurately in the appropriate position.

NO:		TOLERANCE	±0.1 ±0.2 ±0.3 ±0.5 ±0.8 ±1.2
			>9 >6 >30 >120 >315 >1000
		MATERIAL	D4-02-03 2001/12
		TITLE	
UNIT NO.	QUANTITY	SCALE	
		PART NO.	DMR4A0001A01
		CHECK APPROVE	
		DRAWING DESIGN	
		NAME	Betty SEP,27,2000

deta International
TEL:886-4-25617722 FAX:886-4-25617177

deta INTERNATIONAL #40 DISK TYPE TOOL MAGAZINE TOOL CHANGING MOTOIN FLOWCHART-2

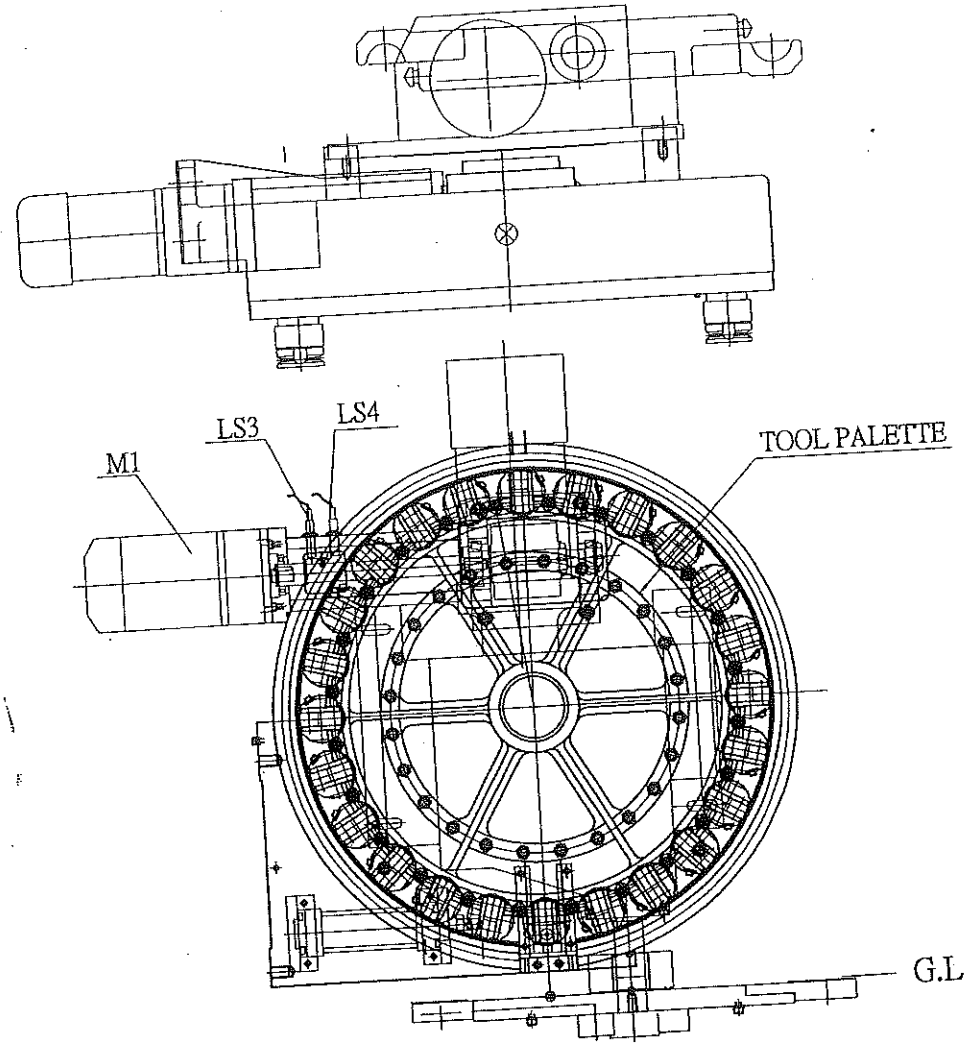

1.When the tool palette is in operation, the tool magazine counter and the position sensor (LS3) and the second counter sensor LS4 (optional) of the tool magazine are connected to the two counters of the CNC controller separately. As the tool palette rotates to its pre-selected tool position, a comparison is made between the two counters. If they are the same, it means all normal; if they are different, the machine should be stopped and send out an alarm. When the tool pot reaches its pre-selected tool position, the tool magazine and the position sensor (LS3) will indicate the status as ON, and the tool magazine's second counter sensor LS4 (optional) will indicate the status as OFF, and the tool magazine motor (M1) cuts off the power supply and stops, awaiting for the CNC tool changing command.

NO:	D4-02-03 2001/12		TOLERANCE
	MATERIAL		>0 ±0.1 >6 ±0.2 >30 ±0.3 >120 ±0.5 >315 ±0.8 >1000 ±1.2
	TITLE		
QUANTITY	SCALE		
UNIT NO.	PART NO.	DMR4A0002A01	
	CHECK APPROVE		
	DRAWING DESIGN		
	NAME	Betty SEP,27,2000	

deta International
TEL:886-4-25617722 FAX:886-4-25617177

deta INTERNATIONAL #40 DISK TYPE TOOL MAGAZINE TOOL CHANGING MOTOIN FLOWCHART-3

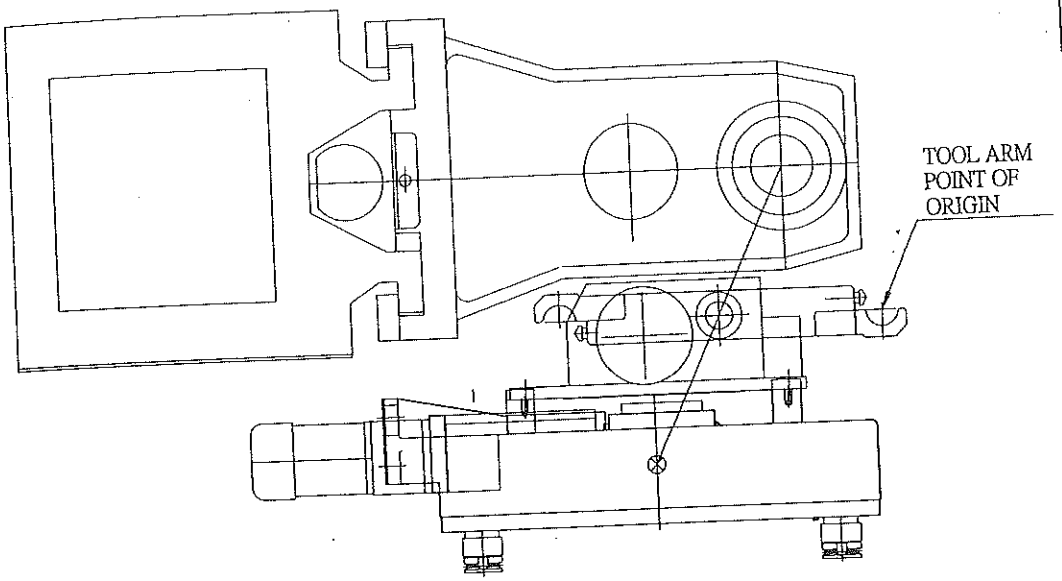

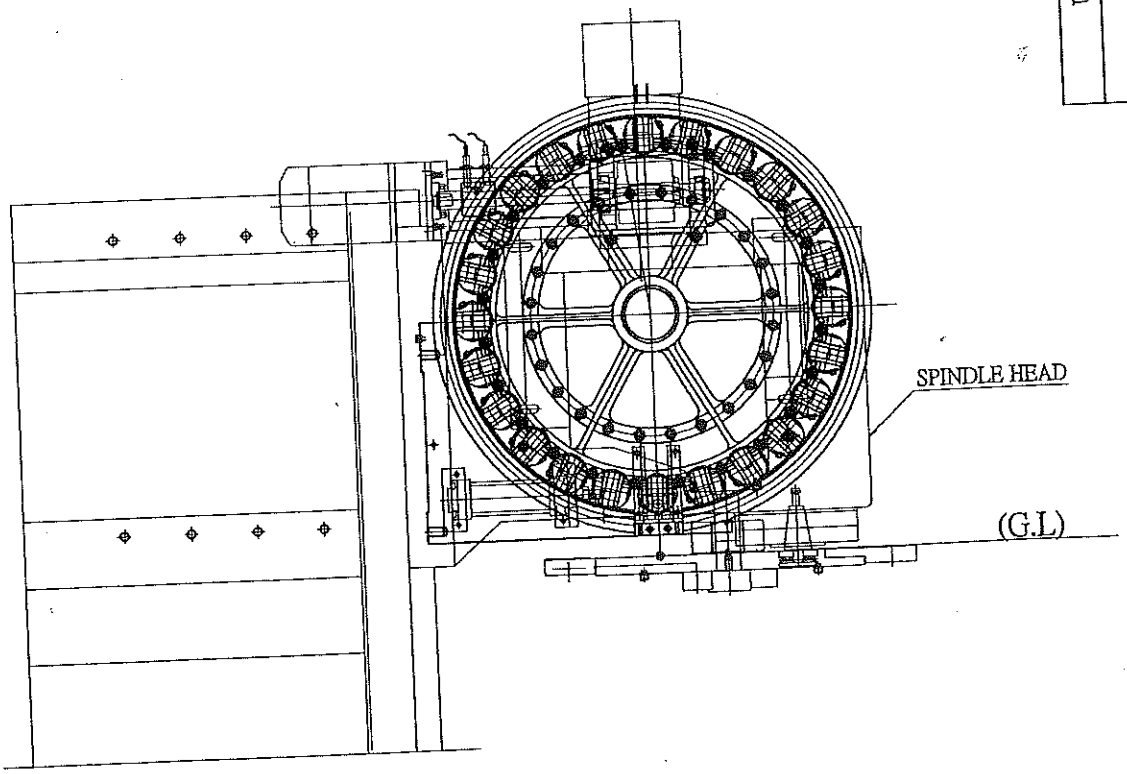

1.Once the processing is completed, the spindle head will rise to the tool changing point, and complete the setting of the spindle orientation.

TOLERANCE	±0.1 ±0.2 ±0.3 ±0.5 ±0.8 ±1.2		
	>0 >6 >30 >120 >315 >1000		
NO:	D4-02-03 2001/12		
MATERIAL		TITLE	
QUANTITY		SCALE	
UNIT NO.		PART NO.	DMR4A0003A01
		CHECK APPROVE	
		DRAWING DESIGN	
		NAME	Betty SEP.27,2000

deta International
TEL:886-4-25617722 FAX:886-4-25617177

deta INTERNATIONAL #40 DISK TYPE TOOL MAGAZINE TOOL CHANGING MOTOIN FLOWCHART-4

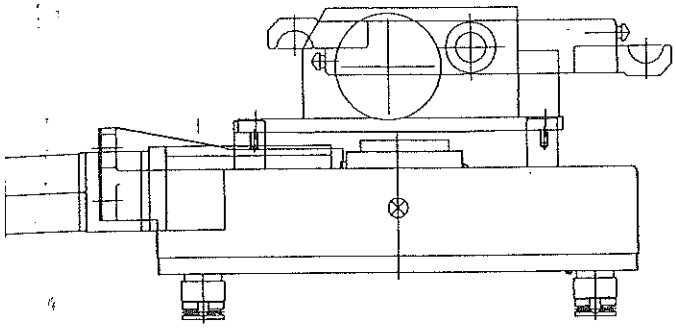

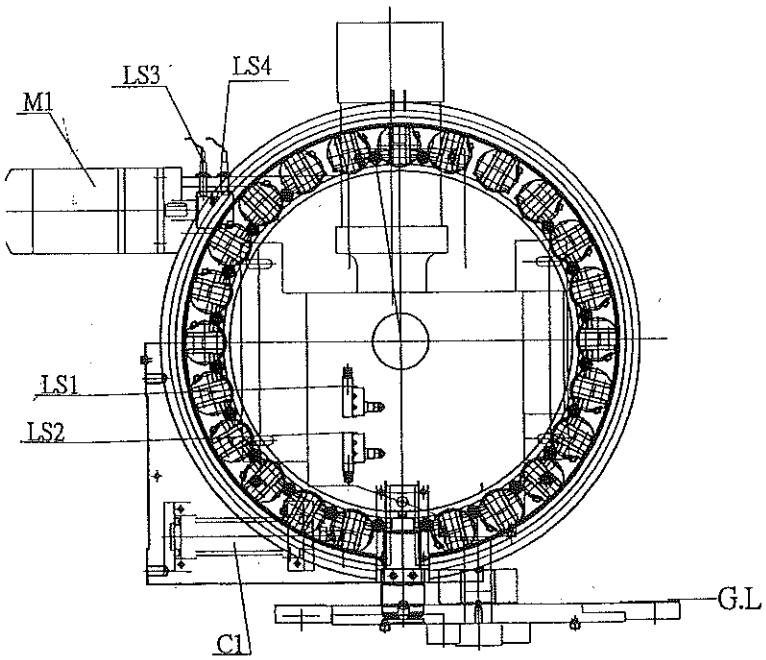

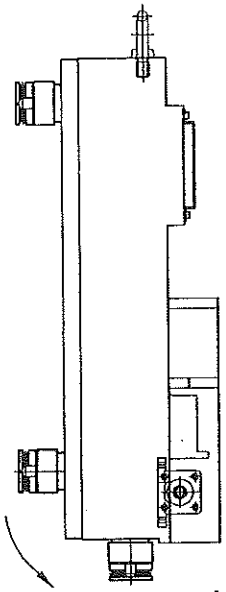

1.When the CNC commands tool changing, execute the tool toppling motion.
2.Wait for the tool pot's tool toppling limits switch (LS1) to indicate the status as ON.
This is to confirm the completion of tool toppling.

NO:		TOLERANCE	±0.1 ±0.2 ±0.3 ±0.5 ±0.8 ±1.2
	D4-02-03 2001/12		>0 >6 >30 >120 >315 >1000
MATERIAL		TITLE	
QUANTITY		SCALE	
UNIT NO.		PART NO.	DMR4A0004A01
		CHECK APPROVE	
		DRAWING DESIGN	
		NAME	Betty SEP,27,2000

deta International
TEL:886-4-25617722 FAX:886-4-25617177

deta INTERNATIONAL #40 DISK TYPE TOOL MAGAZINE TOOL CHANGING MOTOIN FLOWCHART-5

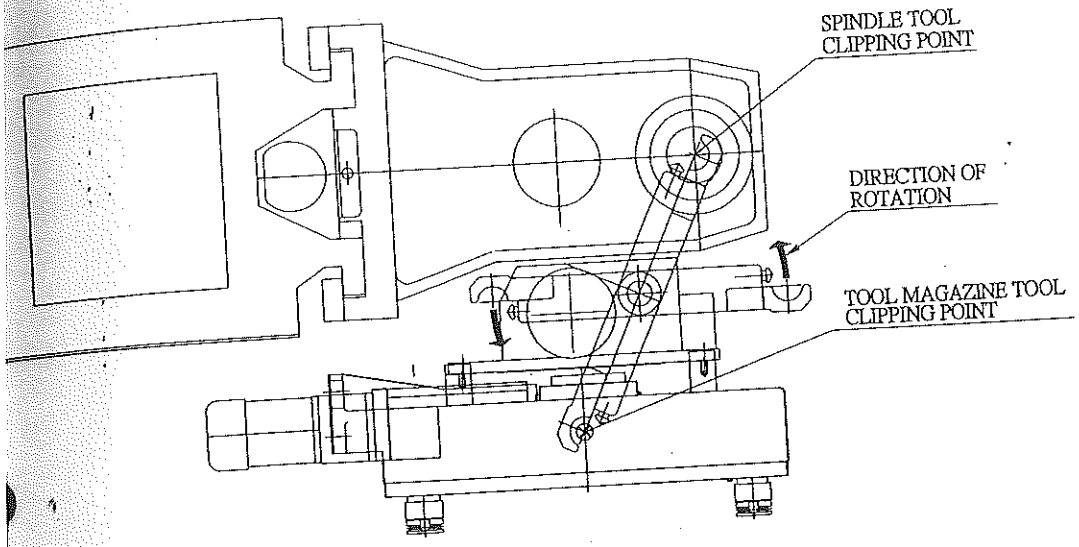

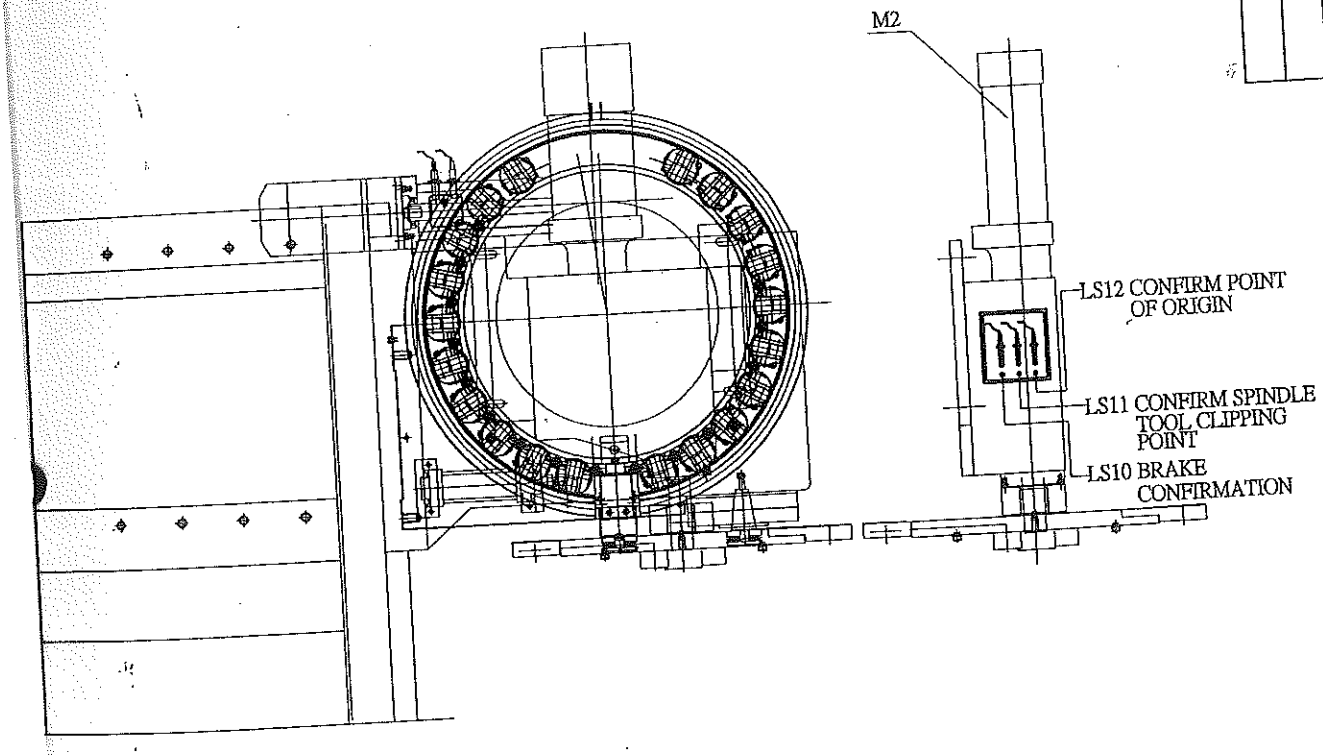

1.When using Type II CAMBOX, start the CAMBOX motor (M2) then rotate the tool changing arm to the tool clipping point (spindle & tool magazine). At this time the CAMBOX brake sensor (LS10) should come to the status of OFF (* Remark*), then cut the power to the CAMBOX motor (M2) and confirm that the CAMBOX tool clipping point LS11 is OFF.

Remark 1. The Type I CAMBOX use M12 PNP NO sensor, the sensor block is a protruding sensor. (It is ON when sensed).
The Type II CAMBOX use ? PNP NO sensor, the sensor block is an indenting sensor. (It is ON when not sensed).

TOLERANCE	±0.1 ±0.2 ±0.3 ±0.5 ±0.8 ±1.2	>0 >6 >30 >120 >315 >1000	
NO:	D4-02-03 2001/12		
MATERIAL		TITLE	
QUANTITY		SCALE	
UNIT NO.		PART NO.	DMR4A0005A01
CHECK APPROVE			
DRAWING DESIGN			
NAME	Betty SEP,27,2000		

deta International
TEL:886-4-25617722 FAX:886-4-25617177

deta INTERNATIONAL #40 DISK TYPE TOOL MAGAZINE TOOL CHANGING MOTOIN FLOWCHART-6

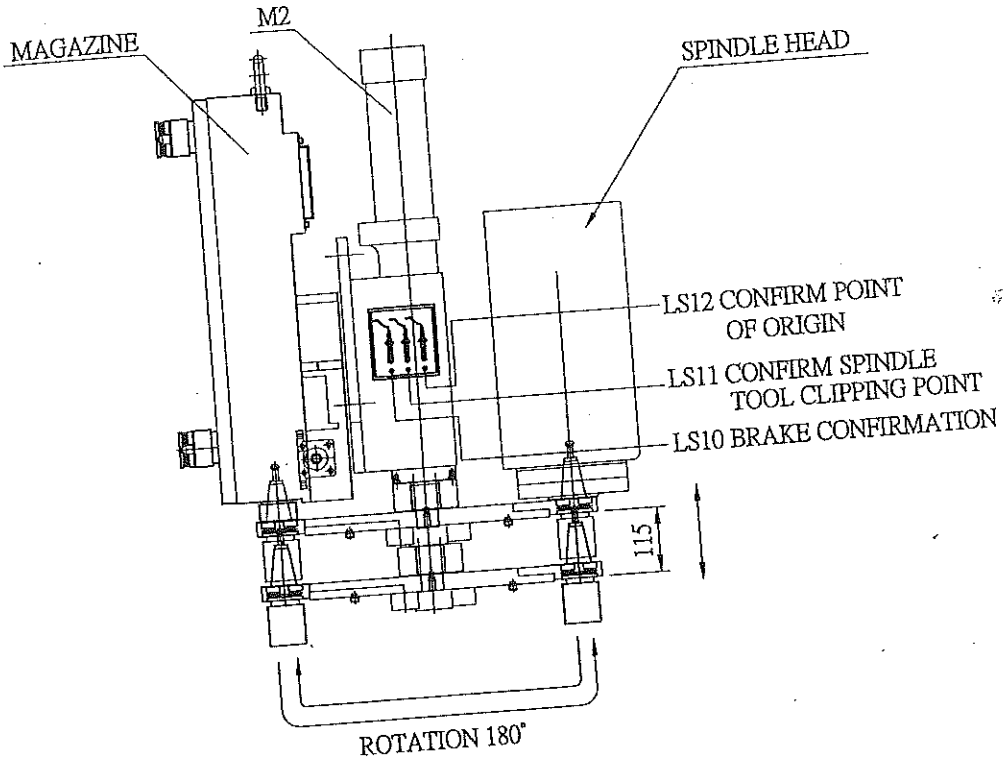

1. Once the spindle has executed the tool releasing motion and confirmed it, start the CAMBOX motor (M2). As the CAMBOX power spindle pulls down the tool-changing arm by 115mm, execute the motion of pulling the tool and rotate 180°and then raise it by 115mm.
2. When the CAMBOX brake sensor LS10 is OFF again, it immediately executes motor braking. At this point, it should confirm that the CAMBOX tool clipping point LS11 is OFF and that the tool arm has reached the position of tool clipping point.

NO:	D4-02-03 2001/12	TOLERANCE	±0.1 ±0.2 ±0.3 ±0.5 ±0.8 ±1.2
			>0 >6 >30 >120 >315 >1000
MATERIAL		TITLE	
QUANTITY		SCALE	
UNIT NO.		PART NO.	DMR4A0006A01
		CHECK APPROVE	
		DRAWING DESIGN	
		NAME	Betty SEP,27,2000

deta International
TEL:886-4-25617722 FAX:886-4-25617177

deta INTERNATIONAL #40 DISK TYPE TOOL MAGAZINE TOOL CHANGING MOTOIN FLOWCHART-7

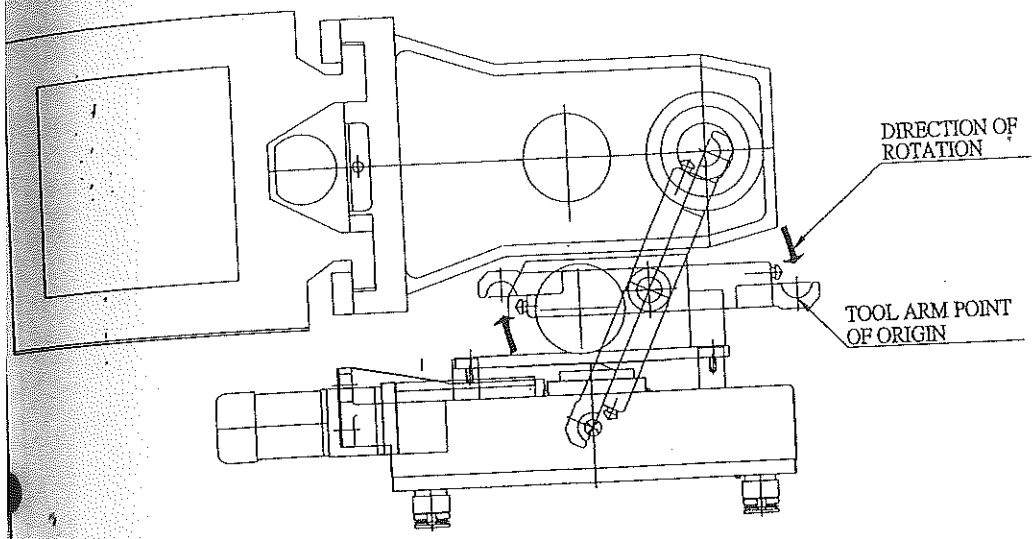

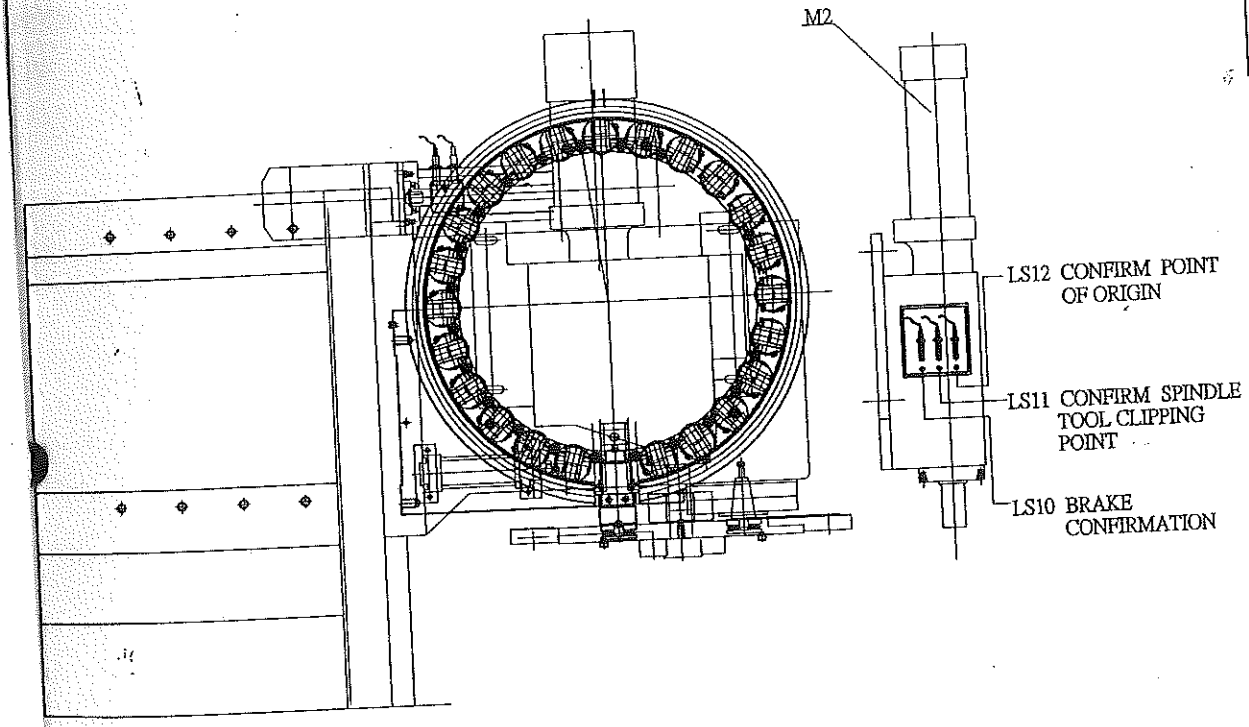

1. Once the spindle has executed the motion of pulling the tool and confirmed its completion, start the CAMBOX motor (M2) to allow the tool-changing arm to return to the point of origin.
2. When the CAMBOX brake sensor LS10 is OFF again, promptly execute the CAMBOX motor braking, and it should confirm that the sensor LS12 of the CAMBOX origin point is OFF, and that the tool arm is positioned at the point of origin.

TOLERANCE	>0 ±0.1 >6 ±0.2 >30 ±0.3 >120 ±0.5 >315 ±0.8 >1000 ±1.2		
NO:	D4-02-03 2001/12		
MATERIAL		TITLE	
QUANTITY		SCALE	
UNIT NO.		PART NO.	DMR4A0007A01
		CHECK APPROVE	
		DRAWING DESIGN	
		NAME	Betty SEP,27,2000

deta International
TEL:886-4-25617722 FAX:886-4-25617177

deta INTERNATIONAL #40 DISK TYPE TOOL MAGAZINE TOOL CHANGING MOTOIN FLOWCHART-8

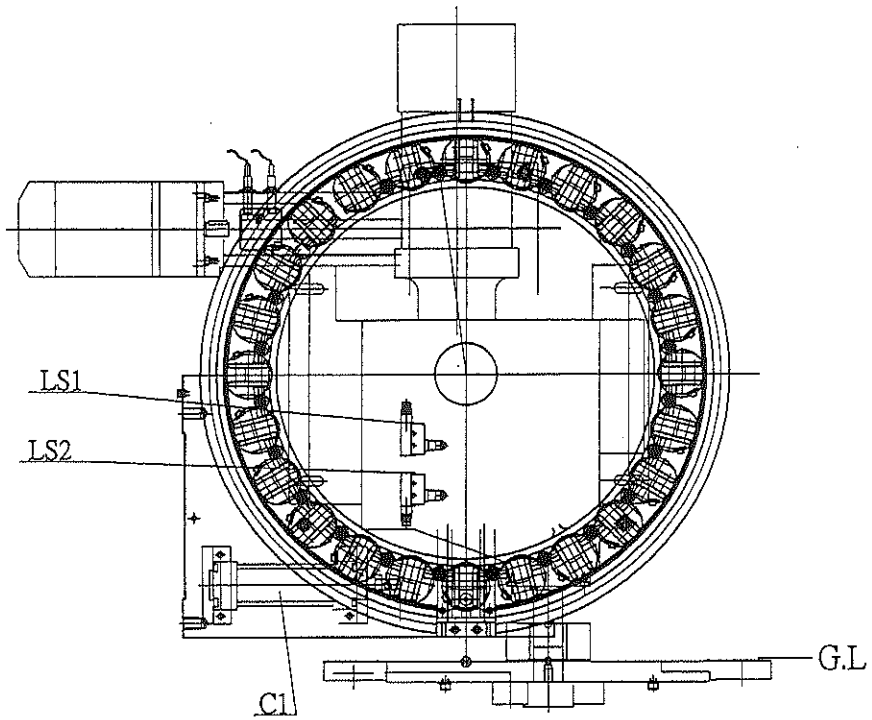

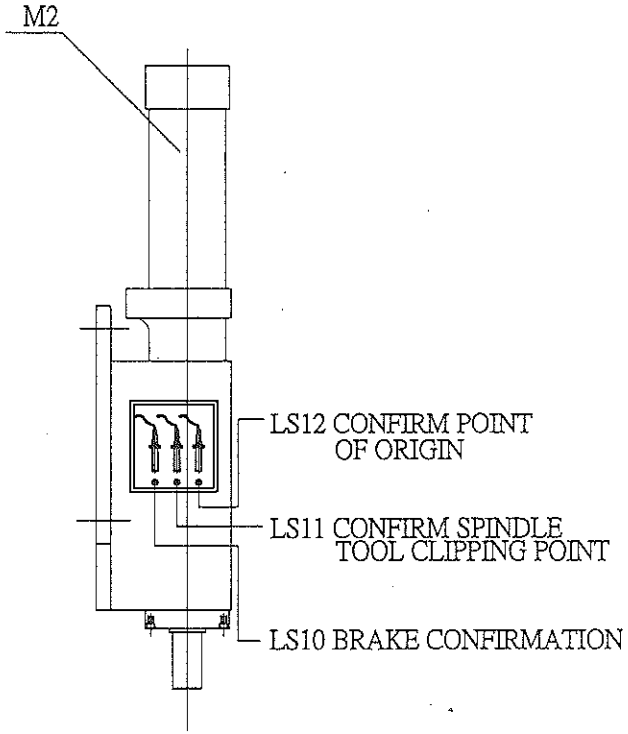

1. The exciter pneumatic directional valve starts off the tool-toppling cylinder and executes the tool returning motion.
2. Once the limits switch (LS2) of the returned tool is ON, it indicates that the tool changing motion has been completed.

				UNIT NO.	QUANTITY	MATERIAL	NO: D4-02-03 2001/12
deta International		DRAWING DESIGN	CHECK APPROVE	PART NO.	SCALE	TITLE	
TEL:886-4-25617722 FAX:886-4-25617177	NAME	Betty SEP,27,2000		DMR4A0008A01			

TOLERANCE	
>0	±0.1
>6	±0.2
>30	±0.3
>120	±0.5
>315	±0.8
>1000	±1.2

4、Power Supply Specification for Electrical Control:

4-1. Follow the table listed below if disk type tool-changing system's power supply is not specified:

Power Supply Category	Electrical	Pneumatic
Specification	Electrical Power Supply: 3 Phase 220V (50/60Hz) Signal Power Supply: DC 24V	5 BAR (Filtered through three- points assembly)

4-2. Specification of Sensor Used In disk Type Tool Changer System Are as Followed:

Sensor	Tool Magazine Positioning and Counting	Tool-Changing Mechanism
Specification	M12 PNP 24V Normal Open Shielded Distance = 2mm	ϕ4 PNP DC24V Normal Open Shielded Distance = 0.8mm

5、Electrical Control:

Configuration Drawing for Electronic Control Components..... DMR4A0009A01

Sequence Drawing of Tool-Changing System..... DMR4A0010A01

Standard Wiring Diagram..... DMR4A0011A01

Motor Wiring Diagram for Tool Magazine..... DMR4A0012A01

Motor Wiring Diagram for CAMBOX..... DMR4A0013A01

Pneumatic Circuit Diagram..... DMR4A0014A01

deta INTERNATIONAL #40 DISK TYPE CONFIGURATION DRAWING FOR ELECTRONIC CONTROL COMPONENTS

Code Description:

M1 :Tool Magazine Motor

M2 :CAMBOX Motor

C1 :Tool Pot Tool Toppling Pneumatic Cylinder

LS1 :Tool Pot Tool Returning Limits Switch

LS2 :Tool Pot Tool Toppling Limits Switch

LS3 :Tool Magazine Counter & Positioning Sensor

LS4 :Tool Magazine Second Counting Sensor (Use for Confirmation Only) (Optional)

LS5 :Tool Magazine Point of Origin Sensor (Optional)

LS10 :CAMBOX Brake Sensor

LS11 :CAMBOX Tool Clipping Point Position Confirmation Sensor

LS12 :CAMBOX Point of Origin Position Confirmation Sensor

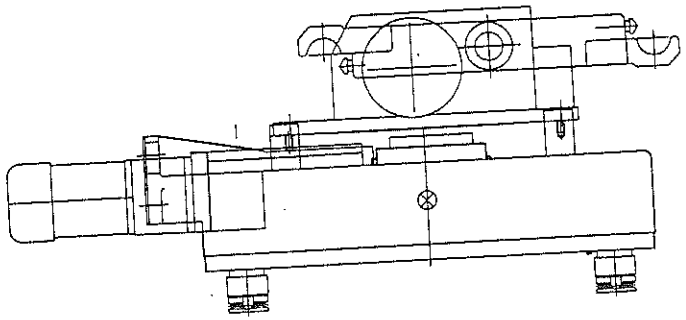

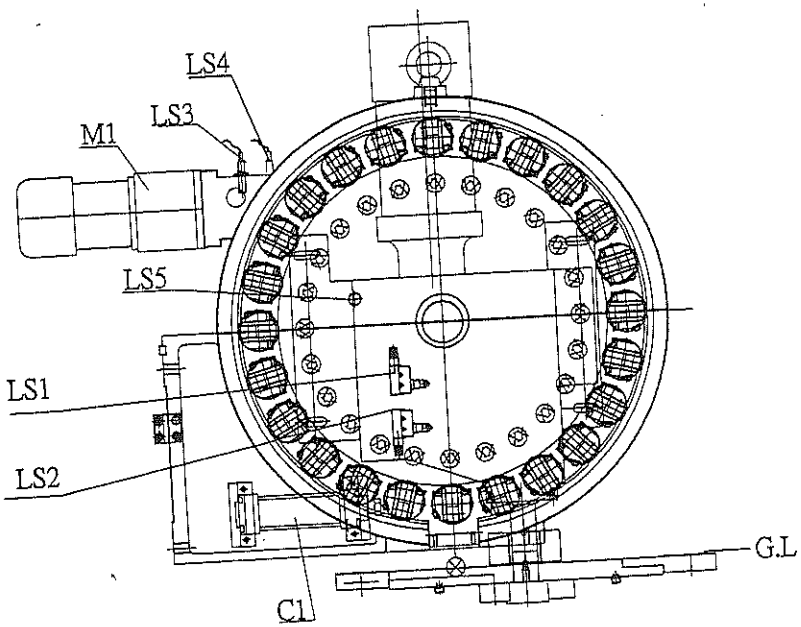

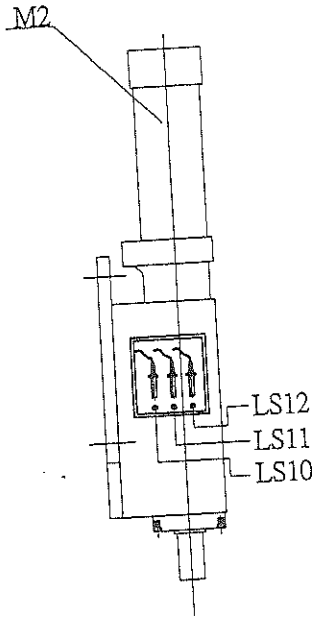

			UNIT NO.	QUANTITY	MATERIAL	NO: D4-02-03 2001/12	TOLERANCE
			PART NO. DMR4A0009A01	SCALE	TITLE		>0 ±0.1; >6 ±0.2; >30 ±0.3; >120 ±0.5; >315 ±0.8; >1000 ±1.2
	DRAWING	DESIGN	CHECK APPROVE				
NAME	Betty SEP,28,2000						

deta International
TEL:886-4-25617722 FAX:886-4-25617177

detaINTERNATIONAL #40 DISK TYPE TOOL-CHANGING SYSTEM SEQUENCE DRAWING

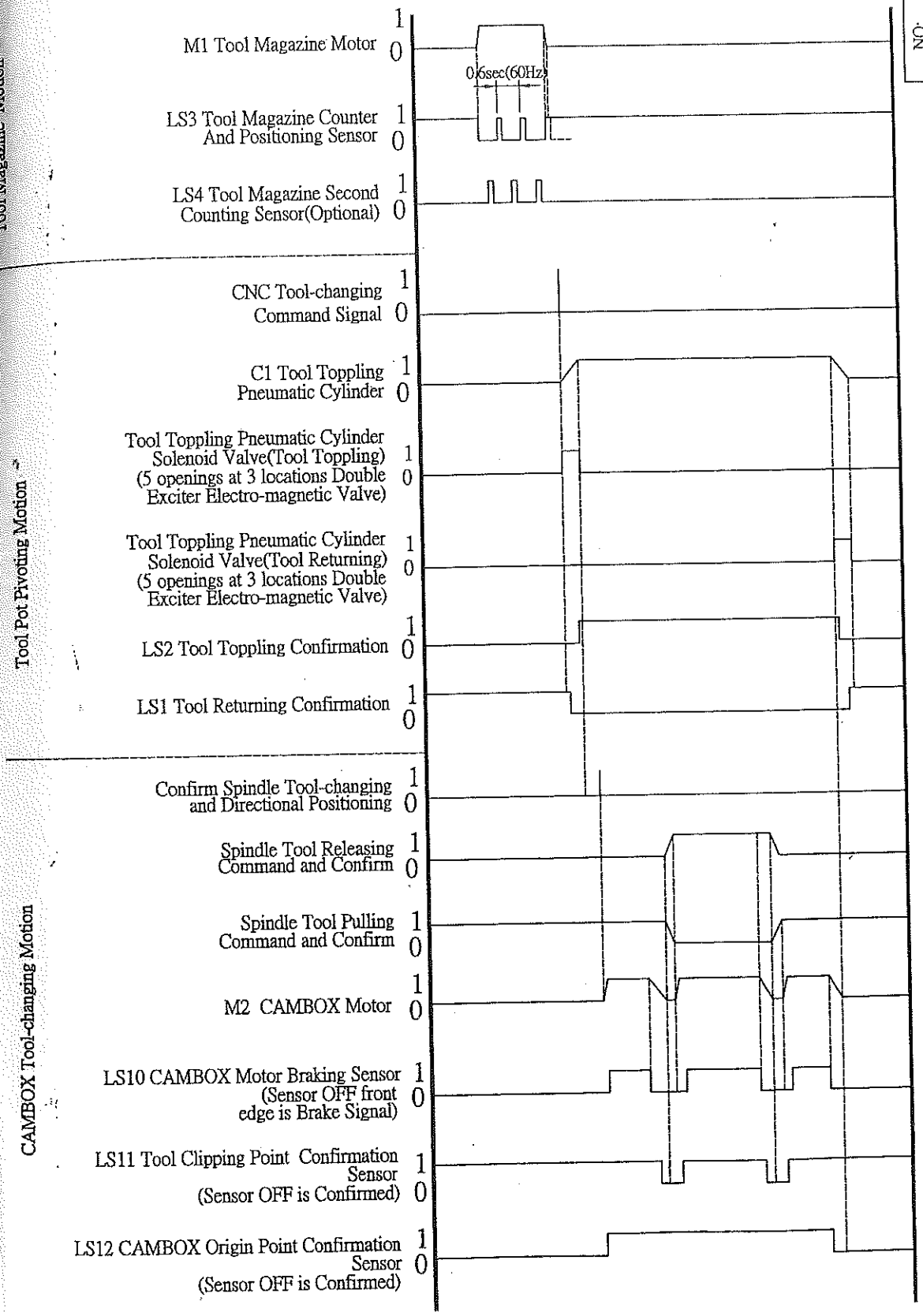

NO:		TOLERANCE	±0.1 ±0.2 ±0.3 ±0.5 ±0.8 ±1.2
	D4-02-03 2001/12		>0 >6 >30 >120 >315 >1000
MATERIAL		TITLE	
QUANTITY		SCALE	
UNIT NO.		PART NO.	DMR4A0010A01
		CHECK APPROVE	
		DRAWING DESIGN	
		NAME	Betty SEP,27,2000

Note:1.LS3,LS4 are Type M12 PNP NO Proximity Switches used on the Tool Magazine Counter,
2.LS1,LS2 are Limits Switches.
3.LS10,LS11,LS12 are Type φ4 PNP NO Proximity Switches used on the CAMBOX.(CAMBOX Concave dog)
4.Tool Magazine Motor is a Three Phaes Three Cable 220V 1/4HP Motor.
5.CAMBOX Motor is a Three Phaes Three Cable 220V 1/2HP Motor.

deta International
TEL:886-4-2561722 FAX:886-4-2561717

deta INTERNATIONAL #40 DISK TYPE TOOL-CHANGING SYSTEM SEQUENCE DRAWING

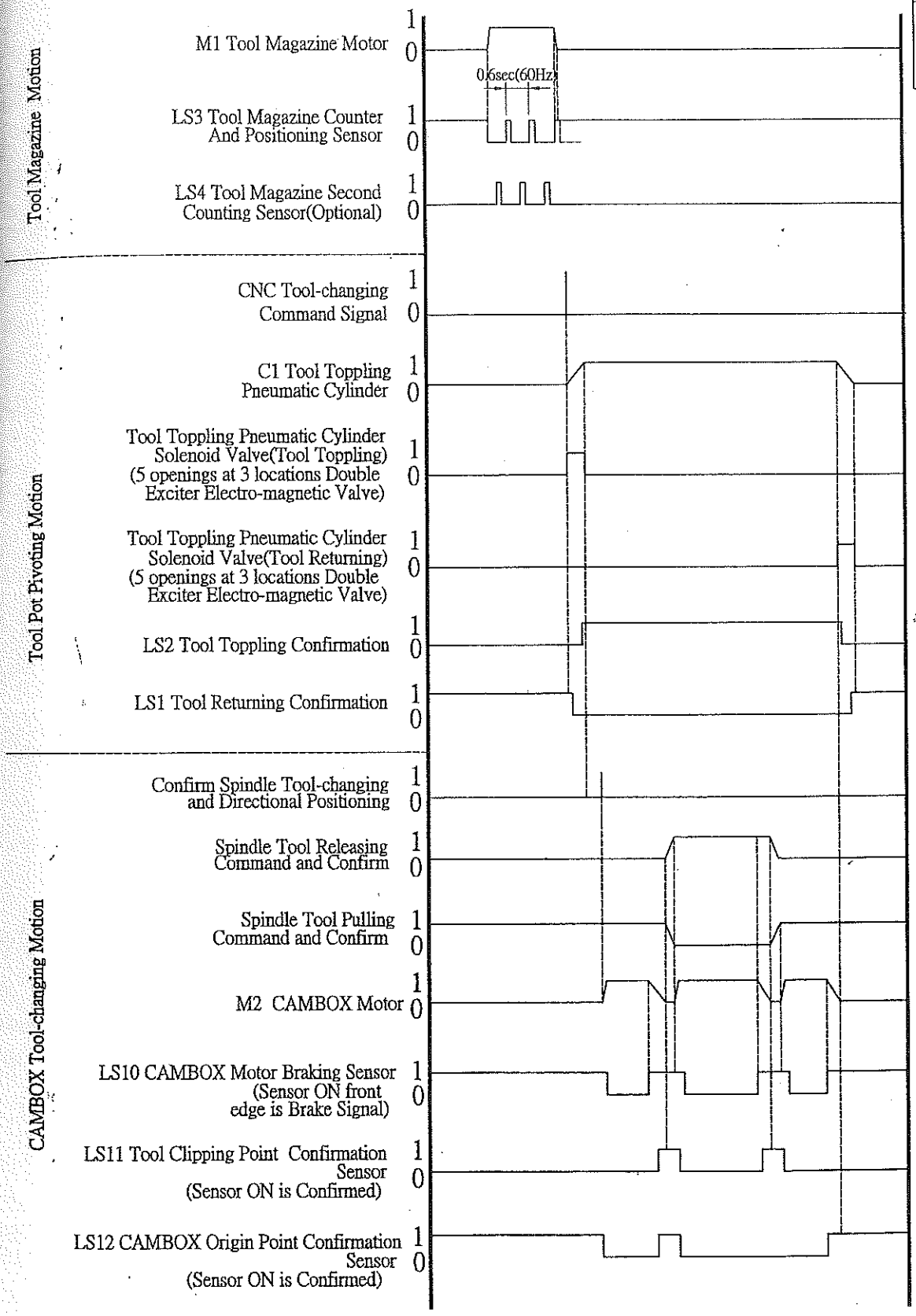

Note:1.LS3,LS4 are Type M12 PNP NO Proximity Switches used on the Tool Magazine Counter,
2.LS1,LS2 are Limits Switches.
3.LS10,LS11,LS12 are Type φ4 PNP NO Proximity Switches used on the CAMBOX.(CAMBOX Extrude dog)
4.Tool Magazine Motor is a Three Phaes Three Cable 220V 1/4HP Motor.
5.CAMBOX Motor is a Three Phaes Three Cable 220V 1/2HP Motor.

NO:	D4-02-03 2001/12	TOLERANCE	±0.1 ±0.2 ±0.3 ±0.5 ±0.8 ±1.2 (>0 >6 >30 >120 >315 >1000)
MATERIAL		TITLE	
QUANTITY		SCALE	
UNIT NO.		PART NO.	DMR4A0010A01
		CHECK APPROVE	
		DRAWING DESIGN	
		NAME	Betty SEP.27,2000

deta International
TEL:886-4-25617722 FAX:886-4-25617177

deta INTERNATIONAL #40 DISK TYPE TOOL-CHANGING SYSTEM SEQUENCE DRAWING

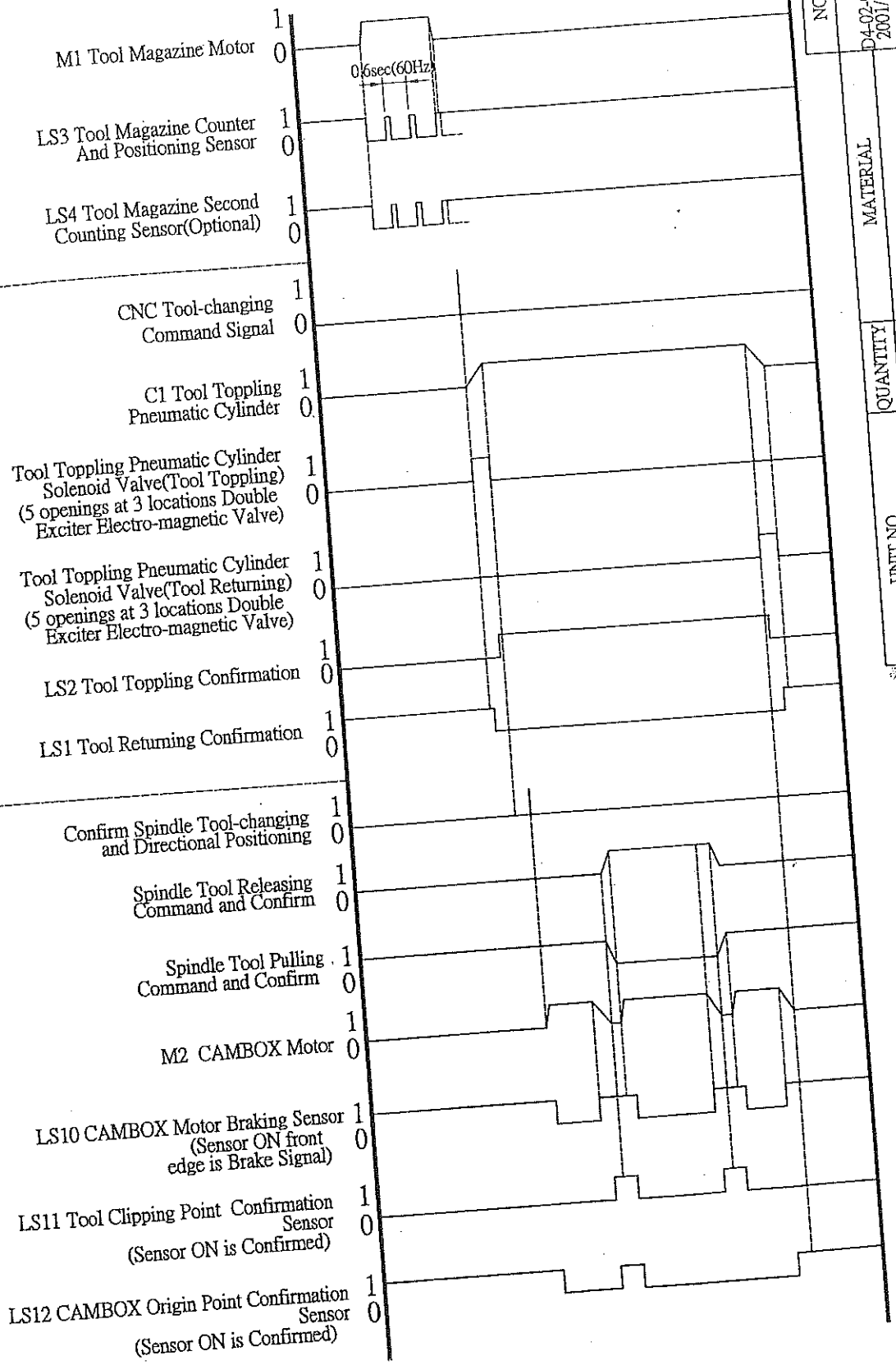

Note:1.LS3,LS4 are Type M12 PNP NO Proximity Switches used on the Tool Magazine Counter,(2 counter sensors ON/OFF at the smae time)
2.LS1,LS2 are Limits Switches.
3.LS10,LS11,LS12 are Type φ4 PNP NO Proximity Switches used on the CAMBOX.(CAMBOXC Extrude dog)
4.Tool Magazine Motor is a Three Phaes Three Cable 220V 1/4HP Motor.
5.CAMBOX Motor is a Three Phaes Three Cable 220V 1/2HP Motor.

NO:	D4-02-03 2001/12	TOLERANCE	±0.1 ±0.2 ±0.3 ±0.5 ±0.8 ±1.2
MATERIAL			<6 >6 >30 >120 >315 >1000
TITLE			
QUANTITY			
SCALE			
UNIT NO.			
PART NO.	DMR4A0010A01		
CHECK APPROVE			
DRAWING DESIGN			
NAME	Betty SEP,27,2000		

deta International
TEL:886-4-25617722 FAX:886-4-25617177

#40 (#50) DISK TYPE TOOL MAGAZINE STANDARD WIRING DIAGRAM

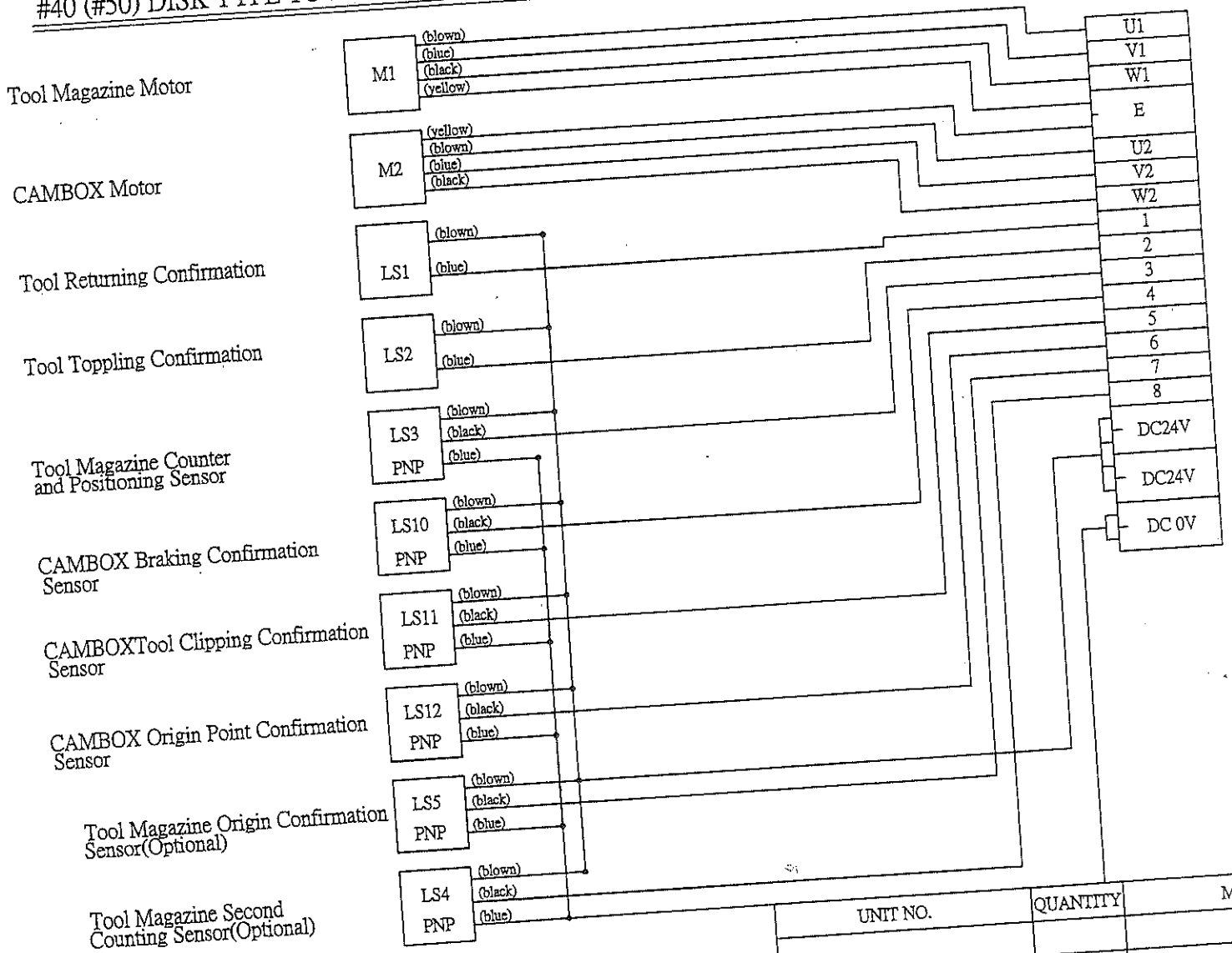

						NO:	
			UNIT NO.	QUANTITY	MATERIAL	D4-02-03 2001/12	TOLERANCE
							>0 ±0.1 >6 ±0.2 >30 ±0.3 >120 ±0.5 >315 ±0.8 >1000 ±1.2
			PART NO.	SCALE	TITLE		
	DRAWING DESIGN	CHECK APPROVE	DMR4A0011A01				
NAME	Betty SEP,27,2000						

deta *International*

TEL:886-4-25617722 FAX:886-4-25617177

deta INTERNATIONAL #40 DISK TYPE TOOL MAGAZINE MOTOR WIRING DIAGRAM

Tool Magazine Motor external view

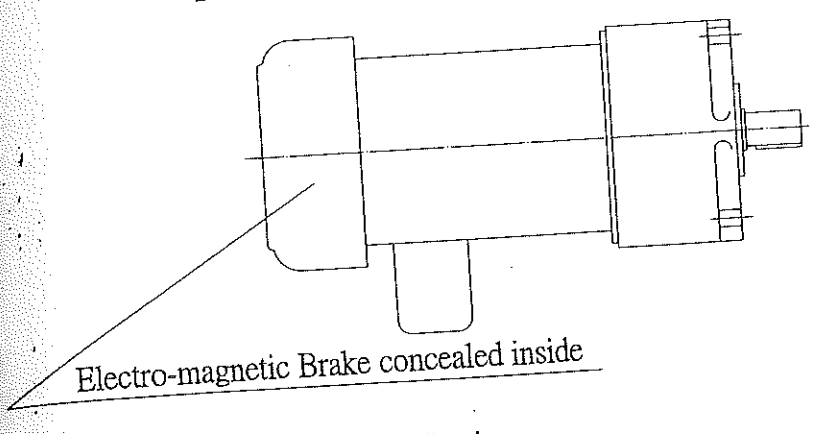

Tool Magazine Motor Electrical Specification:

1.Horse Power:	0.187Kw	6.Insulation Resistance:	100MΩ
2.No.Of Poles:	4P	7.No Load Current:	0.68A
3.voltage:	60HZ,220V	8:Full Load Current:	1.2A
4.Rotational Speed:	1720R.P.M.	9:Brake Gap:	0.3~0.35mm
5.Hi Pot:	1800VA.C		

A.The tool magazine motor is a 0.187Kw three phaese induction motor with electro-magnetic brake (Power Off Braking).

wiring diagram as follow(Suggestion)

AC 220V 3 phaes

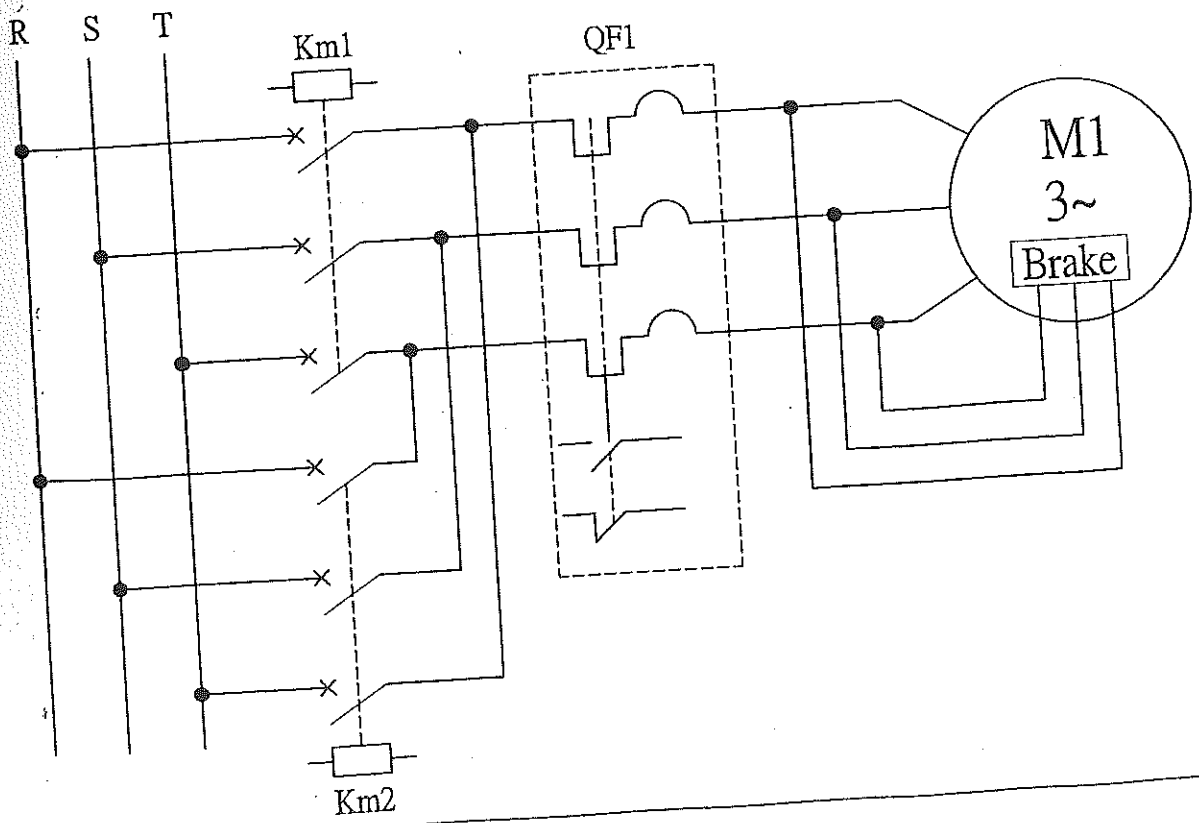

TOLERANCE	±0.1 ±0.2 ±0.3 ±0.5 ±0.8 ±1.2	>0 >6 >30 >120 >315 >1000	
NO:	D4-02-03 2001/12		
MATERIAL		TITLE	
QUANTITY		SCALE	
UNIT NO.		PART NO.	DMR4A0012A01
CHECK APPROVE			
DRAWING	DESIGN		
NAME	Betty SEP,27,2000		

deta International
TEL:886-4-25617722
FAX:886-4-25617177

deta INTERNATIONAL #40 DISK TYPE CAMBOX MOTOR WIRING DIAGRAM

MOTOR EXTERNAL VIEW

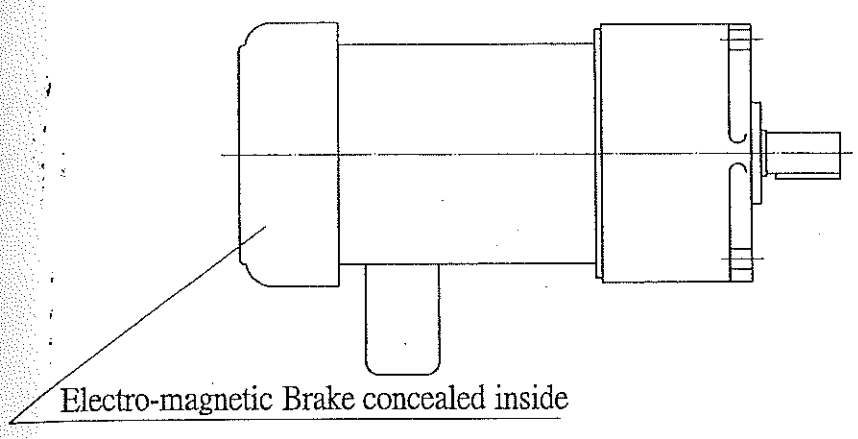

CAMBOX Motor Electrical Specification:

1.Horse Power:	0.373Kw	6.Insulation Resistance:	100MΩ
2.No.Of Poles:	4P	7.No Load Current:	1.15A
3.voltage:	60HZ,220V	8:Full Load Current:	2.0A
4.Rotational Speed:	1720R.P.M.	9:Brake Gap:	0.3~0.35mm
5.Hi Pot:	1800VA.C		

Note:Electro-magnetic Brake Ivolage and Motor Voltage are the equal.

WIRING DIAGRAM AS FOLLOW(Suggestion)
AC 220V 3 PHAES

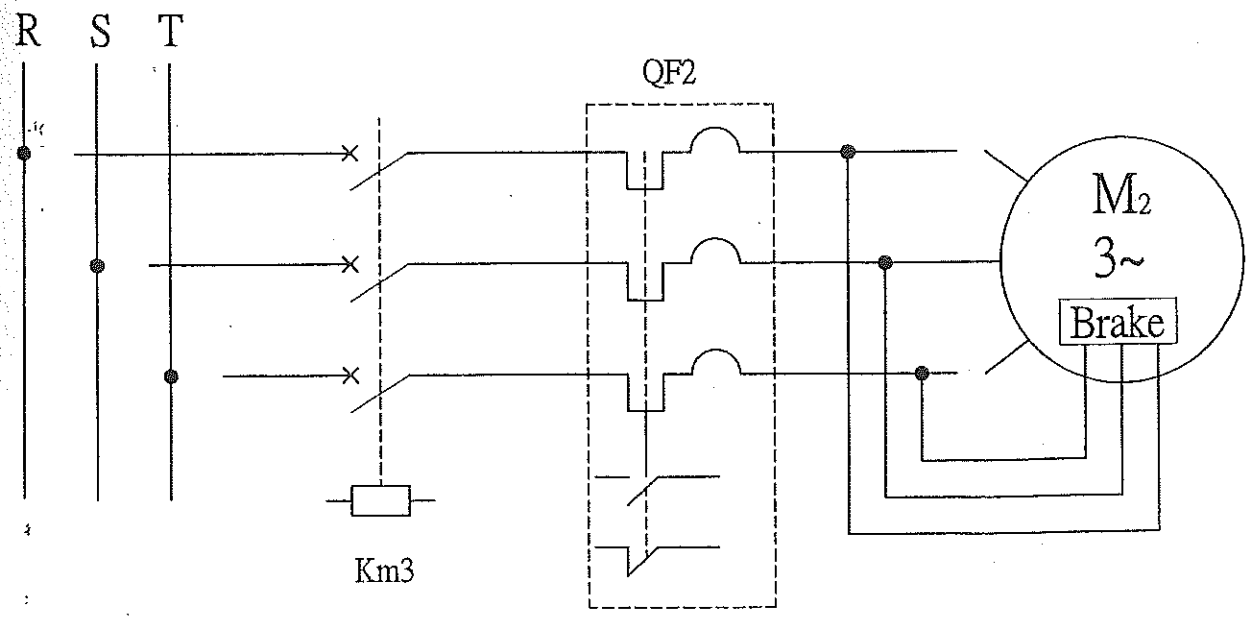

TOLERANCE	>0 ±0.1		
	>6 ±0.2		
	>30 ±0.3		
	>120 ±0.5		
	>315 ±0.8		
	>1000 ±1.2		
NO:	D4-02-03 2001/12		
MATERIAL		TITLE	
QUANTITY		SCALE	
UNIT NO.		PART NO.	DMR4A0013A01
		CHECK APPROVE	
		DRAWING DESIGN	
		NAME	Betty SEP,27,2000

deta International
TEL:886-4-25617722 FAX:886-4-25617177

deta INTERNATIONAL #40 DISK TYPE PNEUMATIC CIRCUIT DIAGRAM

1.We suggest using Double Exciter Electro-magnetic Valve (Voltage DC24V) with 5 openings at 3 locations. This is because during power failure, the pneumatic cylinder will not result in an unexpected movement.
2.Prior to POWER ON for the whole machine, please fill the pneumatic cylinder with air first, but no movement for the pneumatic cylinder. This is to prevent any danger caused by tool pivoting too fast at the first time used.

Tool Pivoting
Pneumatic Cylinder

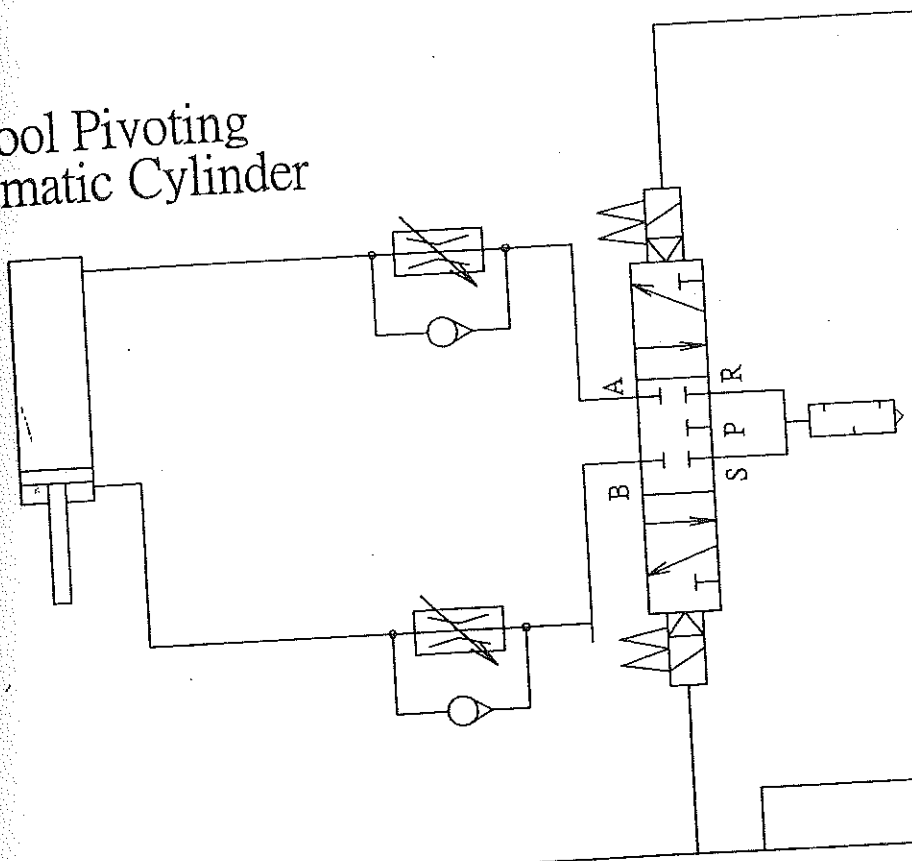

PLC OUT PUT

Note:Pneumatic Tube:Ø10mm

NO:	D4-02-03 2001/12	TOLERANCE	±0.1 ±0.2 ±0.3 ±0.5 ±0.8 ±1.2
			>0 >6 >30 >120 >315 >1000
MATERIAL			
TITLE			
QUANTITY			
SCALE			
UNIT NO.			
PART NO.	DMR4A0014A01		
CHECK APPROVE			
DRAWING DESIGN			
NAME	Betty SET,27,2000		

deta International
TEL:886-4-25617722 FAX:886-4-25617177